connector - with screwless terminals, for harsh applications



Product description	
BALS-Prd.-Nr	31244
EAN	4024941312448
Product category	QUICK-CONNECT TE connector
Current	32A
Number of poles	3p
Arangement of phases	2P+PE
Position of earth contact	6 h
Voltage	200 - 250V~

Bals Elektrotechnik GmbH & Co. KG D-57399 Kirchhundem - Albaum
phone: +49(0)2723/771-0 / fax: +49(0)2723/771-177 / email: info@bals.com

Product description	
Frequency	50/60Hz
Protection degree	IP67/69
Colour code	blue RAL 5015
Colour of appliance	Hinged lid blue RAL 5015, Enclosure blue RAL 5015, Cable gland grey RAL 7035, Bayonet ring grey RAL 7035
Connection design	screwless spring terminals with Kontex-Kontakt
Maximum conductor size	6,0 qmm
Cable entry	with cable gland
Height	198mm
Width	94mm
Depth	97mm
Material of enclosure	Polyamide
Contacts	The contact carrier is made of high temperature resistant material, the contacts are brass nickel plated

Additional technical information	
	For cable diameter from 11 up to max. 23,5 mm, MULTI-GRIP cable gland with gasket, integrated cable clamp and additional water evacuation openings

Logistics data	
Weight/pcs	0.322 kg / Piece
Packaging	Bag

Bals Elektrotechnik GmbH & Co. KG D-57399 Kirchhundem - Albaum
phone: +49(0)2723/771-0 / fax: +49(0)2723/771-177 / email: info@bals.com

Logistics data	
Content amount	1 ST
EAN	4024941312448
Length	97 mm
Width	94 mm
Height	198 mm
Weight	0.323 kg
Volume	1,805.364 ccm
Packaging	Carton
Content amount	10 ST
EAN	4024941958325
Length	325 mm
Width	217 mm
Height	210 mm
Weight	3.426 kg
Volume	13,588.4 ccm

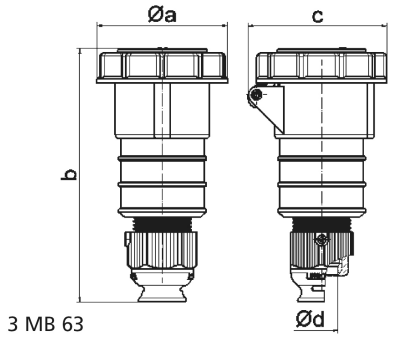

Ampere Polzahl	16 3	16 4	16 5	32 3	32 4	32 5
a ø	70,5	78,0	86,5	94,0	94,0	101,5
b	161,0	161,0	168,0	196,0	196,0	200,0
c	77,0	83,0	93,0	99,0	99,0	107,0
d ø	18,0	18,0	21,0	23,0	23,0	27,0
Leiter mm^2 min	1	1	1	2,5	2,5	2,5
Leiter mm^2 max	2,5	2,5	2,5	6	6	6

Bals Elektrotechnik GmbH & Co. KG D-57399 Kirchhundem - Albaum
phone: +49(0)2723/771-0 / fax: +49(0)2723/771-177 / email: info@bals.com