connector - with screwless terminals, for harsh applications



Product description	
BALS-Prd.-Nr	31243
EAN	4024941312431
Product category	QUICK-CONNECT TE connector
Current	16A
Number of poles	5p
Arangement of phases	3p+N+PE
Position of earth contact	6 h
Voltage	200/346 - 240/415V~

Bals Elektrotechnik GmbH & Co. KG D-57399 Kirchhundem - Albaum
phone: +49(0)2723/771-0 / fax: +49(0)2723/771-177 / email: info@bals.com

Product description	
Frequency	50/60Hz
Protection degree	IP67/69
Colour code	red RAL 3000
Colour of appliance	Bayonet ring grey RAL 7035, Cable gland grey RAL 7035, Hinged lid red RAL 3000, Enclosure red RAL 3000
Connection design	screwless spring terminals with Kontex-Kontakt
Maximum conductor size	2,5 qmm
Cable entry	with cable gland
Height	168mm
Width	87mm
Depth	92mm
Material of enclosure	Polyamide
Contacts	The contact carrier is made of high temperature resistant material, the contacts are brass nickel plated

Additional technical information	
	MULTI-GRIP cable gland with gasket, integrated cable clamp and additional water evacuation openings, For cable diameter from 10 up to max. 21 mm

Logistics data	
Weight/pcs	0.245 kg / Piece
Packaging	Bag

Bals Elektrotechnik GmbH & Co. KG D-57399 Kirchhundem - Albaum
phone: +49(0)2723/771-0 / fax: +49(0)2723/771-177 / email: info@bals.com

Logistics data	
Content amount	1 ST
EAN	4024941312431
Length	92 mm
Width	87 mm
Height	168 mm
Weight	0.246 kg
Volume	1,344.672 ccm
Packaging	Carton
Content amount	10 ST
EAN	4024941958370
Length	258 mm
Width	183 mm
Height	212 mm
Weight	2.602 kg
Volume	8,750 ccm

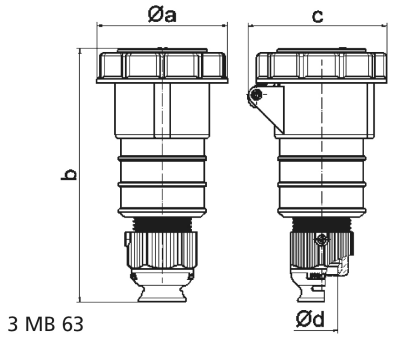

Ampere Polzahl	16 3	16 4	16 5	32 3	32 4	32 5
a ø	70,5	78,0	86,5	94,0	94,0	101,5
b	161,0	161,0	168,0	196,0	196,0	200,0
c	77,0	83,0	93,0	99,0	99,0	107,0
d ø	18,0	18,0	21,0	23,0	23,0	27,0
Leiter mm² min	1	1	1	2,5	2,5	2,5
Leiter mm² max	2,5	2,5	2,5	6	6	6

Bals Elektrotechnik GmbH & Co. KG D-57399 Kirchhundem - Albaum
phone: +49(0)2723/771-0 / fax: +49(0)2723/771-177 / email: info@bals.com