connector - with screwless terminals, for harsh applications



Product description	
BALS-Prd.-Nr	31240
EAN	4024941312400
Product category	QUICK-CONNECT TE connector
Current	16A
Number of poles	3p
Arangement of phases	2P+PE
Position of earth contact	6 h
Voltage	200 - 250V~

Bals Elektrotechnik GmbH & Co. KG D-57399 Kirchhundem - Albaum
phone: +49(0)2723/771-0 / fax: +49(0)2723/771-177 / email: info@bals.com

Product description	
Frequency	50/60Hz
Protection degree	IP67/69
Colour code	blue RAL 5015
Colour of appliance	Hinged lid blue RAL 5015, Enclosure blue RAL 5015, Cable gland grey RAL 7035, Bayonet ring grey RAL 7035
Connection design	screwless spring terminals with Kontex-Kontakt
Maximum conductor size	2,5 qmm
Cable entry	with cable gland
Height	163mm
Width	71mm
Depth	77mm
Material of enclosure	Polyamide
Contacts	The contact carrier is made of high temperature resistant material, the contacts are brass nickel plated

Additional technical information	
	For cable diameter from 8 up to max. 18 mm, MULTI-GRIP cable gland with gasket, integrated cable clamp and additional water evacuation openings

Logistics data	
Weight/pcs	0.175 kg / Piece
Packaging	Bag
Content amount	1 ST

Bals Elektrotechnik GmbH & Co. KG D-57399 Kirchhundem - Albaum
phone: +49(0)2723/771-0 / fax: +49(0)2723/771-177 / email: info@bals.com

Logistics data	
EAN	4024941312400
Length	77 mm
Width	71 mm
Height	163 mm
Weight	0.176 kg
Volume	891.121 ccm
Packaging	Carton
Content amount	10 ST
EAN	4024941962445
Length	245 mm
Width	177 mm
Height	185 mm
Weight	1.883 kg
Volume	7,140 ccm

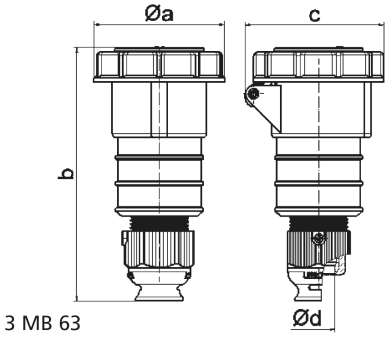

Ampere Polzahl	16 3	16 4	16 5	32 3	32 4	32 5
a ø	70,5	78,0	86,5	94,0	94,0	101,5
b	161,0	161,0	168,0	196,0	196,0	200,0
c	77,0	83,0	93,0	99,0	99,0	107,0
d ø	18,0	18,0	21,0	23,0	23,0	27,0
Leiter mm² min	1	1	1	2,5	2,5	2,5
Leiter mm² max	2,5	2,5	2,5	6	6	6

Bals Elektrotechnik GmbH & Co. KG D-57399 Kirchhundem - Albaum
phone: +49(0)2723/771-0 / fax: +49(0)2723/771-177 / email: info@bals.com