connector - INNOLINQ lead-free, with QUICK-CONNECT and MULTI-GRIP



Product description	
BALS-Prd.-Nr	3118
EAN	4024941347297
Product category	Connector INNOLINQ QC
Current	32A
Number of poles	4p
Arangement of phases	3P+PE
Position of earth contact	6 h
Voltage	380 - 415V~

Bals Elektrotechnik GmbH & Co. KG D-57399 Kirchhundem - Albaum
phone: +49(0)2723/771-0 / fax: +49(0)2723/771-177 / email: info@bals.com

Product description	
Frequency	50/60Hz
Protection degree	IP54
Colour code	red RAL 3000
Colour of appliance	Hinged lid dark grey RAL 7012, Collar red RAL 3000, Housing cover dark grey RAL 7012, Cable gland dark grey RAL 7012
Connection design	screwless spring terminals with KONTEX-ULTRA contact
Maximum conductor size	6,0 qmm
Cable entry	with cable gland
Height	205mm
Width	80mm
Depth	99mm
Material of enclosure	Polyamide
Contacts	The contacts are brass, The contact carrier is made of high temperature resistant material

Additional technical information	
	This product is without any lead
	The enclosure components are connected without screws and are secured by a snap-lock mechanism.Opening is only possible with a screwdriver., MULTI-GRIP cable gland with gasket and integrated strain relief, For cable diameter from 13 up to max. 29 mm

Logistics data	
Weight/pcs	0.312 kg / Piece

Bals Elektrotechnik GmbH & Co. KG D-57399 Kirchhundem - Albaum
phone: +49(0)2723/771-0 / fax: +49(0)2723/771-177 / email: info@bals.com

Logistics data	
Packaging	Bag
Content amount	1 ST
EAN	4024941347297
Length	99 mm
Width	80 mm
Height	205 mm
Weight	0.313 kg
Volume	1,623.6 ccm

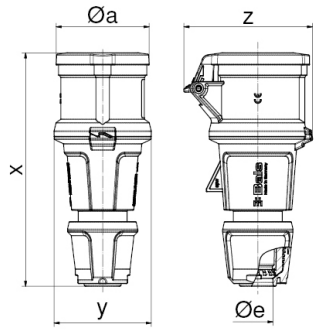

Ampere Polzahl	16 3	16 5	32 3	32 4	32 5
ø a	55,0	68,0	69,0	69,0	76,0
x	157,0	171,0	205,0	205,0	205,0
y	59,0	71,0	80,0	80,0	80,0
z	80,0	94,0	99,0	99,0	105,0
ø e	18,0	21,0	29,0	29,0	29,0
Cond. mm² min	1	1	2,5	2,5	2,5
Cond. mm² max	2,5	2,5	6,0	6,0	6,0

Bals Elektrotechnik GmbH & Co. KG D-57399 Kirchhundem - Albaum
phone: +49(0)2723/771-0 / fax: +49(0)2723/771-177 / email: info@bals.com



Bals Elektrotechnik GmbH & Co. KG D-57399 Kirchhundem - Albaum
phone: +49(0)2723/771-0 / fax: +49(0)2723/771-177 / email: info@bals.com