connector - with screwless terminals



Product description	
BALS-Prd.-Nr	3141
EAN	4024941031417
Product category	QUICK-CONNECT connector
Current	32A
Number of poles	4p
Arangement of phases	3P+PE
Position of earth contact	9 h
Voltage	200 - 250V~
Frequency	50/60Hz

Bals Elektrotechnik GmbH & Co. KG D-57399 Kirchhundem - Albaum
phone: +49(0)2723/771-0 / fax: +49(0)2723/771-177 / email: info@bals.com

Product description	
Protection degree	IP44
Colour code	blue RAL 5015
Colour of appliance	Hinged lid blue RAL 5015, Cable gland grey RAL 7035, Housing cover grey RAL 7035, Collar blue RAL 5015
Connection design	screwless spring terminals with Kontex-Kontakt
Maximum conductor size	6,0 qmm
Cable entry	with cable gland
Height	194mm
Width	79mm
Depth	93mm
Material of enclosure	Polyamide
Contacts	The contacts are brass, The contact carrier is made of polyamide

Additional technical information	
	For cable diameter from 11 up to max. 23,5 mm, MULTI-GRIP cable gland with gasket and integrated strain relief, The enclosure components are connected without screws and are secured by a snap-lock mechanism.Opening is only possible with a screwdriver.

Logistics data	
Weight/pcs	0.261 kg / Piece
Packaging	Bag
Content amount	1 ST

Bals Elektrotechnik GmbH & Co. KG D-57399 Kirchhundem - Albaum
phone: +49(0)2723/771-0 / fax: +49(0)2723/771-177 / email: info@bals.com

Logistics data	
EAN	4024941031417
Length	93 mm
Width	79 mm
Height	194 mm
Weight	0.262 kg
Volume	1,425.318 ccm
Packaging	Carton
Content amount	10 ST
EAN	4024941967754
Length	295 mm
Width	185 mm
Height	215 mm
Weight	2.774 kg
Volume	9,975 ccm

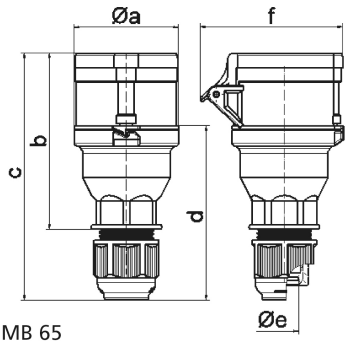

3 MB 65

Ampere Polzahl	16 3	16 4	16 5	32 3	32 4	32 5
a ø	53,0	60,0	66,0	74,5	74,5	74,5
b	100,5	112,5	113,5	133,5	133,5	134,5
c	141,0	153,0	154,0	186,0	186,0	187,0
d	97,5	104,5	105,5	127,5	127,5	128,5
e ø	18,0	18,0	18,0	23,0	23,0	23,0
f	76,0	79,0	86,0	92,0	92,0	97,0
Leiter mm² min	1	1	1	2,5	2,5	2,5
Leiter mm² max	2,5	2,5	2,5	6	6	6

Bals Elektrotechnik GmbH & Co. KG D-57399 Kirchhundem - Albaum
phone: +49(0)2723/771-0 / fax: +49(0)2723/771-177 / email: info@bals.com