wall mounting appliance inlet - with hinged cover



Product description	
BALS-Prd.-Nr	24414
EAN	4024941244145
Product category	TE wall mounting appliance inlet QUICK-CONNECT
Current	16A
Number of poles	5p
Arangement of phases	3p+N+PE
Position of earth contact	6 h
Voltage	200/346 - 240/415V~
Frequency	50/60Hz

Bals Elektrotechnik GmbH & Co. KG D-57399 Kirchhundem - Albaum
phone: +49(0)2723/771-0 / fax: +49(0)2723/771-177 / email: info@bals.com

Product description	
Protection degree	IP44
Colour code	red RAL 3000
Colour of appliance	Housing bottom grey RAL 7035, Housing top grey RAL 7035, Collar red RAL 3000, Hinged lid grey RAL 7035
Connection design	screwless spring-clamp technology
Maximum conductor size	2,5 qmm
Cable entry	top entry M20
Height	138mm
Width	84mm
Depth	105mm
Dimension of enclosure	84x84 mm
Material of enclosure	Polyamide
Contacts	The contact carrier is made of high temperature resistant material, the contacts are brass nickel plated

Additional technical information	
	The cable entry is one at top open and one rear sided closed
	With hinged lid

Logistics data	
Weight/pcs	0.269 kg / Piece
Packaging	Bag

Bals Elektrotechnik GmbH & Co. KG D-57399 Kirchhundem - Albaum
phone: +49(0)2723/771-0 / fax: +49(0)2723/771-177 / email: info@bals.com

Logistics data	
Content amount	1 ST
EAN	4024941244145
Length	105 mm
Width	84 mm
Height	138 mm
Weight	0.27 kg
Volume	1,217.16 ccm
Packaging	Carton
Content amount	10 ST
EAN	4024941941754
Length	325 mm
Width	217 mm
Height	210 mm
Weight	2.896 kg
Volume	13,588.4 ccm

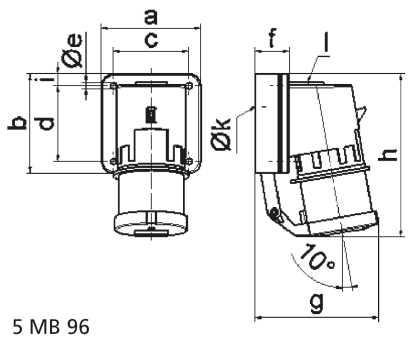

5 MB 96

Ampere Polzahl	16 5	32 5
a	84,0	90,0
b	84,0	75,0
c	64,0	78,0
d	64,0	45,0
e ø	5,5	5,5
f	29,0	29,0
g	105,0	115,0
h	138,0	150,0
i	10,0	13,0
k ø	23,0	29,0
l	M20	M25
Leiter mm² min	1	2,5
Leiter mm² max	2,5	6

Bals Elektrotechnik GmbH & Co. KG D-57399 Kirchhundem - Albaum
phone: +49(0)2723/771-0 / fax: +49(0)2723/771-177 / email: info@bals.com