wall mounting appliance inlet - with closure cap



Product description	
BALS-Prd.-Nr	24023
EAN	4024941240239
Product category	Wall mounting appliance inlet
Current	32A
Number of poles	3p
Arangement of phases	2P+PE
Position of earth contact	6 h
Voltage	200 - 250V~
Frequency	50/60Hz

Bals Elektrotechnik GmbH & Co. KG D-57399 Kirchhundem - Albaum
phone: +49(0)2723/771-0 / fax: +49(0)2723/771-177 / email: info@bals.com

Product description	
Protection degree	IP67/69
Colour code	blue RAL 5015
Colour of appliance	Housing bottom grey RAL 7035, Housing top grey RAL 7035, Collar blue RAL 5015, Bayonet ring grey RAL 7035, Closure cap grey RAL 7035
Connection design	with screw terminal
Maximum conductor size	6,0 qmm
Cable entry	top entry M25
Height	148mm
Width	94mm
Depth	121mm
Dimension of enclosure	75x90 mm (HxW)
Material of enclosure	Polyamide
Contacts	The contact carrier is made of polyamide, the contacts are brass nickel plated

Additional technical information	
	The cable entry is one at top open and one rear sided closed
	With closure cap

Logistics data	
Weight/pcs	0.368 kg / Piece
Packaging	Bag

Bals Elektrotechnik GmbH & Co. KG D-57399 Kirchhundem - Albaum
phone: +49(0)2723/771-0 / fax: +49(0)2723/771-177 / email: info@bals.com

Logistics data	
Content amount	1 ST
EAN	4024941240239
Length	121 mm
Width	94 mm
Height	148 mm
Weight	0.369 kg
Volume	1,683.352 ccm
Packaging	Carton
Content amount	10 ST
EAN	4024941940481
Length	330 mm
Width	216 mm
Height	260 mm
Weight	3.906 kg
Volume	17,062.5 ccm

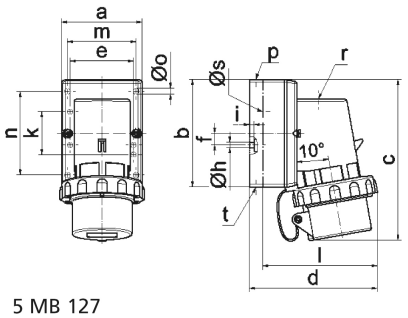

5 MB 127

Ampere	16	16	16	32	32	32
Polzahl	3	4	5	3	4	5
a	64,0	75,0	84,0	90,0	90,0	90,0
b	87,0	100,0	84,0	75,0	75,0	75,0
c	137,0	151,0	137,0	147,0	147,0	148,0
d	112,0	119,0	-	122,0	122,0	123,0
e	51,0	59,0	-	-	-	-
f	-	11,0	-	-	-	-
h ø	4,1	5,1	-	-	-	-
i	4,5	4,5	-	-	-	-
k	40,0	-	-	-	-	-
l	-	-	111,0	-	-	-
m	-	-	64,0	78,0	78,0	78,0
n	-	-	64,0	45,0	45,0	45,0
o ø	-	-	5,5	5,5	5,5	5,5
p	M20	M20	-	-	-	-
r	-	-	M20	M25	M25	M25
s ø	-	-	23,0	29,0	29,0	29,0
t	für M20	für M20	-	-	-	-

Bals Elektrotechnik GmbH & Co. KG D-57399 Kirchhundem - Albaum
phone: +49(0)2723/771-0 / fax: +49(0)2723/771-177 / email: info@bals.com