wall mounting appliance inlet - with closure cap



Product description	
BALS-Prd.-Nr	2485
EAN	4024941024853
Product category	Wall mounting appliance inlet
Current	16A
Number of poles	3p
Arangement of phases	2P+PE
Position of earth contact	6 h
Voltage	200 - 250V~
Frequency	50/60Hz

Bals Elektrotechnik GmbH & Co. KG D-57399 Kirchhundem - Albaum
phone: +49(0)2723/771-0 / fax: +49(0)2723/771-177 / email: info@bals.com

Product description	
Protection degree	IP67/69
Colour code	blue RAL 5015
Colour of appliance	Housing bottom grey RAL 7035, Closure cap grey RAL 7035, Bayonet ring grey RAL 7035, Housing top grey RAL 7035, Collar blue RAL 5015
Connection design	with screw terminal
Maximum conductor size	2,5 qmm
Cable entry	top entry M20
Height	138mm
Width	70mm
Depth	112mm
Dimension of enclosure	87x64 mm (HxW)
Material of enclosure	Polyamide
Contacts	the contacts are brass nickel plated, The contact carrier is made of polyamide

Additional technical information	
	The cable entry is one at top open and one at bottom and one rear side closed
	With closure cap

Logistics data	
Weight/pcs	0.241 kg / Piece
Packaging	Bag

Bals Elektrotechnik GmbH & Co. KG D-57399 Kirchhundem - Albaum
phone: +49(0)2723/771-0 / fax: +49(0)2723/771-177 / email: info@bals.com

Logistics data	
Content amount	1 ST
EAN	4024941024853
Length	112 mm
Width	70 mm
Height	138 mm
Weight	0.242 kg
Volume	1,081.92 ccm
Packaging	Carton
Content amount	10 ST
EAN	4024941968416
Length	325 mm
Width	217 mm
Height	210 mm
Weight	2.616 kg
Volume	13,588.4 ccm

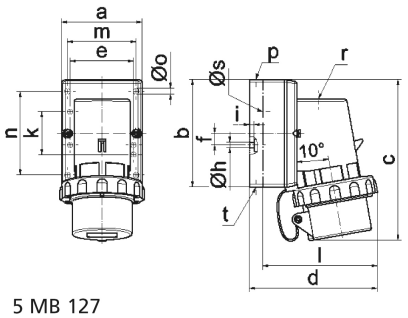

5 MB 127

Ampere	16	16	16	32	32	32
Polzahl	3	4	5	3	4	5
a	64,0	75,0	84,0	90,0	90,0	90,0
b	87,0	100,0	84,0	75,0	75,0	75,0
c	137,0	151,0	137,0	147,0	147,0	148,0
d	112,0	119,0	-	122,0	122,0	123,0
e	51,0	59,0	-	-	-	-
f	-	11,0	-	-	-	-
h ø	4,1	5,1	-	-	-	-
i	4,5	4,5	-	-	-	-
k	40,0	-	-	-	-	-
l	-	-	111,0	-	-	-
m	-	-	64,0	78,0	78,0	78,0
n	-	-	64,0	45,0	45,0	45,0
o ø	-	-	5,5	5,5	5,5	5,5
p	M20	M20	-	-	-	-
r	-	-	M20	M25	M25	M25
s ø	-	-	23,0	29,0	29,0	29,0
t	für M20	für M20	-	-	-	-

Bals Elektrotechnik GmbH & Co. KG D-57399 Kirchhundem - Albaum
phone: +49(0)2723/771-0 / fax: +49(0)2723/771-177 / email: info@bals.com