wall mounting appliance inlet - INNOLINQ lead-free, with QUICK-CONNECT



Product description	
BALS-Prd.-Nr	24661
EAN	4024941927987
Product category	Wall mounting appliance inlet INNOLINQ QC
Current	32A
Number of poles	5p
Arangement of phases	3p+N+PE
Position of earth contact	6 h
Voltage	200/346 - 240/415V~

Bals Elektrotechnik GmbH & Co. KG D-57399 Kirchhundem - Albaum
phone: +49(0)2723/771-0 / fax: +49(0)2723/771-177 / email: info@bals.com

Product description	
Frequency	50/60Hz
Protection degree	IP54
Colour code	red RAL 3000
Colour of appliance	Housing top dark grey RAL 7012, Housing bottom dark grey RAL 7012, Collar red RAL 3000
Connection design	screwless spring terminals with KONTEX-ULTRA contact
Maximum conductor size	10,0 qmm
Cable entry	M32
Height	148mm
Width	94mm
Depth	95mm
Dimension of enclosure	92x94 mm (HxW)
Material of enclosure	Polyamide
Contacts	The contacts are brass, The contact carrier is made of high temperature resistant material

Additional technical information	
	The cable entry is one at top open and one at bottom closed, This product is without any lead

Logistics data	
Weight/pcs	0.322 kg / Piece
Packaging	Bag

Bals Elektrotechnik GmbH & Co. KG D-57399 Kirchhundem - Albaum
phone: +49(0)2723/771-0 / fax: +49(0)2723/771-177 / email: info@bals.com

Logistics data	
Content amount	1 ST
EAN	4024941927987
Length	95 mm
Width	94 mm
Height	148 mm
Weight	0.323 kg
Volume	1,321.64 ccm
Packaging	Carton
Content amount	10 ST
EAN	4024941351461
Length	325 mm
Width	217 mm
Height	210 mm
Weight	3.426 kg
Volume	13,588.4 ccm

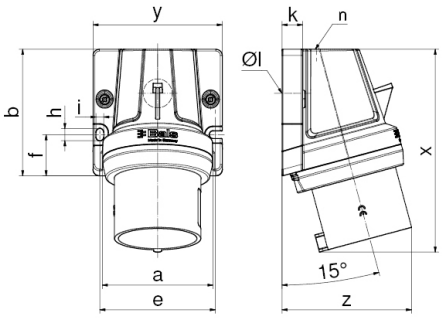

Ampere Polzahl	16 5	32 3	32 4	32 5
a	80,0	80,0	80,0	80,0
b	92,0	92,0	92,0	92,0
e	84,0	84,0	84,0	84,0
f	30,0	30,0	30,0	30,0
h	9,0	9,0	9,0	9,0
i	5,5	5,5	5,5	5,5
k	15,0	15,0	15,0	15,0
ø l	21,0	21,0	21,0	21,0
n	M32	M32	M32	M32
x	134,0	147,0	147,0	148,0
y	94,0	94,0	94,0	94,0
z	93,0	92,0	92,0	95,0
Cond. mm² min	1,0	2,5	2,5	2,5
Cond. mm² max	4,0	10,0	10,0	10,0

Bals Elektrotechnik GmbH & Co. KG D-57399 Kirchhundem - Albaum
phone: +49(0)2723/771-0 / fax: +49(0)2723/771-177 / email: info@bals.com



Bals Elektrotechnik GmbH & Co. KG D-57399 Kirchhundem - Albaum
phone: +49(0)2723/771-0 / fax: +49(0)2723/771-177 / email: info@bals.com