wall mounting appliance inlet - with external fixing

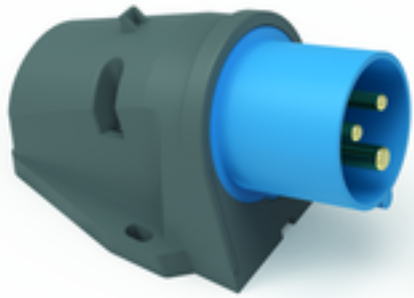

Product description	
BALS-Prd.-Nr	24423
EAN	4024941244237
Product category	wall mounting appliance inlet Quick-Connect
Current	16A
Number of poles	3p
Arangement of phases	2P+PE
Position of earth contact	6 h
Voltage	200 - 250V~
Frequency	50/60Hz

Bals Elektrotechnik GmbH & Co. KG D-57399 Kirchhundem - Albaum
phone: +49(0)2723/771-0 / fax: +49(0)2723/771-177 / email: info@bals.com

Product description	
Protection degree	IP44
Colour code	blue RAL 5015
Colour of appliance	Housing bottom grey RAL 7035, Collar blue RAL 5015, Housing top blue RAL 5015
Connection design	screwless spring-clamp technology
Maximum conductor size	2,5 qmm
Cable entry	top entry M20
Height	121mm
Width	72mm
Depth	72mm
Dimension of enclosure	90x72 mm (HxW)
Material of enclosure	Polyamide
Contacts	The contacts are brass, The contact carrier is made of polyamide

Additional technical information	
	The cable entry is one at top open and one at bottom closed

Logistics data	
Weight/pcs	0.145 kg / Piece
Packaging	Bag
Content amount	1 ST
EAN	4024941244237

Bals Elektrotechnik GmbH & Co. KG D-57399 Kirchhundem - Albaum
phone: +49(0)2723/771-0 / fax: +49(0)2723/771-177 / email: info@bals.com

Logistics data	
Length	72 mm
Width	72 mm
Height	121 mm
Weight	0.146 kg
Volume	627.264 ccm
Packaging	Carton
Content amount	10 ST
EAN	4024941958141
Length	275 mm
Width	175 mm
Height	137 mm
Weight	1.575 kg
Volume	5,737.5 ccm

Bals Elektrotechnik GmbH & Co. KG D-57399 Kirchhundem - Albaum
phone: +49(0)2723/771-0 / fax: +49(0)2723/771-177 / email: info@bals.com

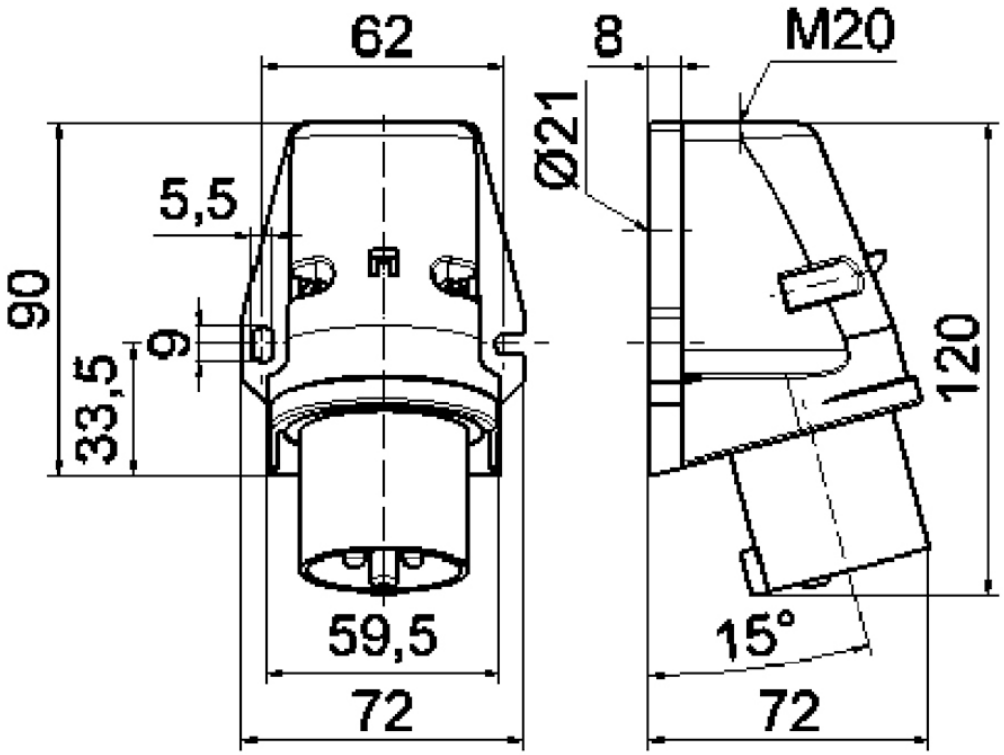

5 MB 163

Bals Elektrotechnik GmbH & Co. KG D-57399 Kirchhundem - Albaum
phone: +49(0)2723/771-0 / fax: +49(0)2723/771-177 / email: info@bals.com

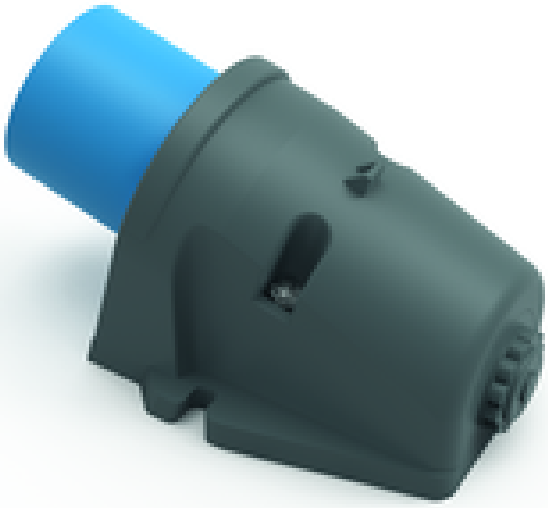

Bals Elektrotechnik GmbH & Co. KG D-57399 Kirchhundem - Albaum
phone: +49(0)2723/771-0 / fax: +49(0)2723/771-177 / email: info@bals.com