flanged appliance inlet - flange 100x100, fixing centers 80x80



Product description	
BALS-Prd.-Nr	28052
EAN	4024941280525
Product category	TE flanged appliance inlet straight
Current	63A
Number of poles	5p
Arangement of phases	3p+N+PE
Position of earth contact	6 h
Voltage	200/346 - 240/415V~

Bals Elektrotechnik GmbH & Co. KG D-57399 Kirchhundem - Albaum
phone: +49(0)2723/771-0 / fax: +49(0)2723/771-177 / email: info@bals.com

Product description	
Frequency	50/60Hz
Protection degree	IP44
Colour code	red RAL 3000
Colour of appliance	Collar red RAL 3000, Enclosure grey RAL 7035
Connection design	screw terminal as box terminal
Maximum conductor size	16,0 qmm
Cable entry	other
Height	100mm
Width	100mm
Depth	114mm
Flange size vertical in mm	100mm
Flange size horizontal in mm	100mm
Drill hole dist. vertical mm	80mm
Drill hole dist. horizontal mm	80mm
Material of enclosure	Polyamide
Contacts	The contact carrier is made of high temperature resistant material, the contacts are brass nickel plated

Additional technical information	
	A retaining device to match the hinged cover of the connector must be provided to ensure the latching feature
	Collar in middle of flange

Bals Elektrotechnik GmbH & Co. KG D-57399 Kirchhundem - Albaum
phone: +49(0)2723/771-0 / fax: +49(0)2723/771-177 / email: info@bals.com

Logistics data	
Weight/pcs	0.575 kg / Piece
Packaging	Bag
Content amount	1 ST
EAN	4024941280525
Length	114 mm
Width	100 mm
Height	100 mm
Weight	0.576 kg
Volume	1,140 ccm
Packaging	Carton
Content amount	5 ST
EAN	4024941946063
Length	258 mm
Width	183 mm
Height	212 mm
Weight	3.027 kg
Volume	8,750 ccm

Bals Elektrotechnik GmbH & Co. KG D-57399 Kirchhundem - Albaum
phone: +49(0)2723/771-0 / fax: +49(0)2723/771-177 / email: info@bals.com

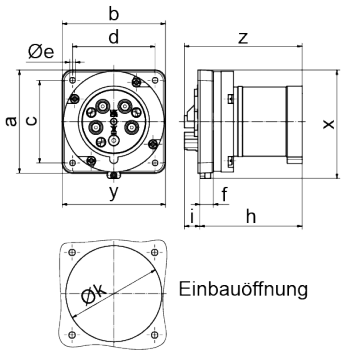

Einbauöffnung

Ampere Polzahl	63 3	63 4	63 5
a	100	100	100
b	100	100	100
c	80	80	80
d	80	80	80
Øe	6,3	6,3	6,3
f	13	13	13
h	99	99	99
i	15	15	15
Øl	93	93	93
x	105	105	105
y	100	100	100
z	114	114	114

Bals Elektrotechnik GmbH & Co. KG D-57399 Kirchhundem - Albaum
phone: +49(0)2723/771-0 / fax: +49(0)2723/771-177 / email: info@bals.com