flanged appliance inlet - flange 75x75, fixing centers 60x60



Product description	
BALS-Prd.-Nr	282001
EAN	4024941014632
Product category	flanged appliance inlet Quick-Connect, straight
Current	16A
Number of poles	5p
Arangement of phases	3p+N+PE
Position of earth contact	6 h
Voltage	200/346 - 240/415V~

Bals Elektrotechnik GmbH & Co. KG D-57399 Kirchhundem - Albaum
phone: +49(0)2723/771-0 / fax: +49(0)2723/771-177 / email: info@bals.com

Product description	
Frequency	50/60Hz
Protection degree	IP44
Colour code	red RAL 3000
Colour of appliance	Enclosure red RAL 3000
Connection design	screwless spring-clamp technology
Maximum conductor size	2,5 qmm
Cable entry	other
Height	75mm
Width	75mm
Depth	96mm
Flange size vertical in mm	75mm
Flange size horizontal in mm	75mm
Drill hole dist. vertical mm	60mm
Drill hole dist. horizontal mm	60mm
Material of enclosure	Polyamide
Contacts	The contact carrier is made of polyamide, The contacts are brass

Additional technical information	
	A retaining device to match the hinged cover of the connector must be provided to ensure the latching feature
	Collar is brought out of center of the flange by 5 mm

Bals Elektrotechnik GmbH & Co. KG D-57399 Kirchhundem - Albaum
phone: +49(0)2723/771-0 / fax: +49(0)2723/771-177 / email: info@bals.com

Logistics data	
Weight/pcs	0.117 kg / Piece
Packaging	Bag
Content amount	1 ST
EAN	4024941014632
Length	96 mm
Width	75 mm
Height	75 mm
Weight	0.118 kg
Volume	540 ccm
Packaging	Carton
Content amount	10 ST
EAN	4024941958257
Length	275 mm
Width	175 mm
Height	137 mm
Weight	1.295 kg
Volume	5,737.5 ccm

Bals Elektrotechnik GmbH & Co. KG D-57399 Kirchhundem - Albaum
phone: +49(0)2723/771-0 / fax: +49(0)2723/771-177 / email: info@bals.com

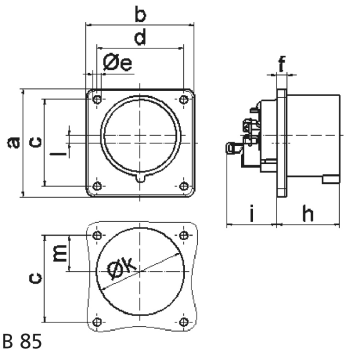

5 MB 85

Ampere Polzahl	16 3	16 4	16 5	32 3	32 4	32 5
a	75,0	75,0	75,0	75,0	75,0	75,0
b	75,0	75,0	75,0	75,0	75,0	75,0
c	60,0	60,0	60,0	60,0	60,0	60,0
d	60,0	60,0	60,0	60,0	60,0	60,0
e ø	5,5	5,5	5,5	5,5	5,5	5,5
f	7,0	7,0	7,0	7,0	7,0	7,0
h	43,0	43,0	43,0	53,0	53,0	53,0
i	39,0	39,0	39,0	43,0	43,0	43,0
k ø	42,0	48,0	61,0	57,0	57,0	60,0
l	-	-	5,0	2,0	2,0	-
m	30,0	30,0	25,0	28,0	28,0	30,0
Leiter mm^2 min	1	1	1	2,5	2,5	2,5
Leiter mm^2 max	2,5	2,5	2,5	6	6	6

Bals Elektrotechnik GmbH & Co. KG D-57399 Kirchhundem - Albaum
phone: +49(0)2723/771-0 / fax: +49(0)2723/771-177 / email: info@bals.com