plug - with screwless terminals, for harsh applications



Product description	
BALS-Prd.-Nr	21240
EAN	4024941212403
Product category	QUICK-CONNECT TE plug
Current	32A
Number of poles	3p
Arangement of phases	2P+PE
Position of earth contact	6 h
Voltage	200 - 250V~
Frequency	50/60Hz

Bals Elektrotechnik GmbH & Co. KG D-57399 Kirchhundem - Albaum
phone: +49(0)2723/771-0 / fax: +49(0)2723/771-177 / email: info@bals.com

Product description	
Protection degree	IP67/69
Colour code	blue RAL 5015
Colour of appliance	Collar blue RAL 5015, Housing cover blue RAL 5015, Cable gland grey RAL 7035, Bayonet ring grey RAL 7035
Connection design	screwless spring-clamp technology
Maximum conductor size	6,0 qmm
Cable entry	with cable gland
Height	180mm
Width	94mm
Depth	94mm
Material of enclosure	Polyamide
Contacts	The contact carrier is made of high temperature resistant material, the contacts are brass nickel plated

Additional technical information	
	MULTI-GRIP cable gland with gasket, integrated cable clamp and additional water evacuation openings, For cable diameter from 11 up to max. 23,5 mm

Logistics data	
Weight/pcs	0.298 kg / Piece
Packaging	Bag
Content amount	1 ST

Bals Elektrotechnik GmbH & Co. KG D-57399 Kirchhundem - Albaum
phone: +49(0)2723/771-0 / fax: +49(0)2723/771-177 / email: info@bals.com

Logistics data	
EAN	4024941212403
Length	95 mm
Width	95 mm
Height	181 mm
Weight	0.299 kg
Volume	1,633.525 ccm
Packaging	Carton
Content amount	10 ST
EAN	4024941958073
Length	325 mm
Width	217 mm
Height	210 mm
Weight	3.186 kg
Volume	13,588.4 ccm

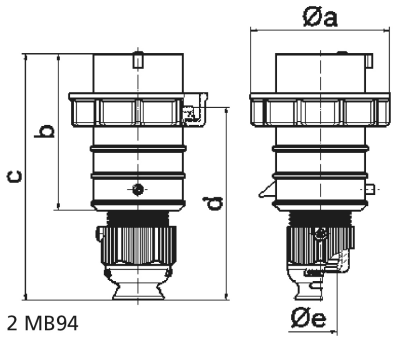

2 MB94

Ampere Polzahl	16 3	16 4	16 5	32 3	32 4	32 5
a ø	70,0	78,0	86,0	94,0	94,0	101,0
b	95,0	95,0	97,0	118,0	118,0	117,0
c	145,0	145,0	152,0	178,0	178,0	181,0
d	111,0	111,0	119,0	136,0	136,0	138,5
e ø	18,0	18,0	21,0	23,0	23,0	27,0
Leiter mm² min	1	1	1	2,5	2,5	2,5
Leiter mm² max	2,5	2,5	2,5	6	6	6

Bals Elektrotechnik GmbH & Co. KG D-57399 Kirchhundem - Albaum
phone: +49(0)2723/771-0 / fax: +49(0)2723/771-177 / email: info@bals.com