phase inverter - with screwless terminals



Product description	
BALS-Prd.-Nr	227
EAN	4024941002271
Product category	QUICK-CONNECT phase inverter MULTI-GRIP cable gland
Current	32A
Number of poles	5p
Arangement of phases	3p+N+PE
Position of earth contact	6 h
Voltage	200/346 - 240/415V~
Frequency	50/60Hz

Bals Elektrotechnik GmbH & Co. KG D-57399 Kirchhundem - Albaum
phone: +49(0)2723/771-0 / fax: +49(0)2723/771-177 / email: info@bals.com

Product description	
Protection degree	IP54
Colour code	red RAL 3000
Colour of appliance	Cable gland dark grey RAL 7012, Collar red RAL 3000, Housing cover dark grey RAL 7012
Connection design	screwless spring-clamp technology
Maximum conductor size	6,0 qmm
Cable entry	with cable gland
Height	178mm
Width	79mm
Depth	88mm
Material of enclosure	Polyamide
Contacts	the contacts are brass nickel plated, The contact carrier is made of polyamide

Additional technical information	
	The enclosure components are connected without screws and are secured by a snap-lock mechanism.Opening is only possible with a screwdriver., MULTI-GRIP cable gland with gasket and integrated strain relief, For cable diameter from 11 up to max. 23,5 mm

Logistics data	
Weight/pcs	0.294 kg / Piece
Packaging	Carton
Content amount	10 ST

Bals Elektrotechnik GmbH & Co. KG D-57399 Kirchhundem - Albaum
phone: +49(0)2723/771-0 / fax: +49(0)2723/771-177 / email: info@bals.com

Logistics data	
EAN	4024941958134
Length	295 mm
Width	185 mm
Height	215 mm
Weight	3.104 kg
Volume	9,975 ccm

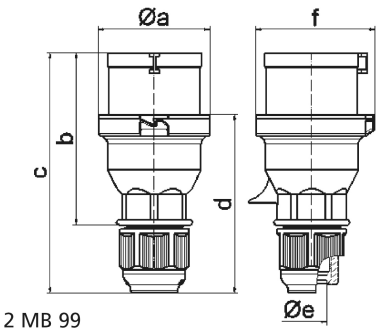

2 MB 99

Ampere Polzahl	16 3	16 4	16 5	32 3	32 4	32 5
a ø	53,0	60,0	66,0	74,5	74,5	74,5
b	93,5	100,5	103,0	121,0	121,0	121,5
c	134,0	141,0	142,0	174,0	174,0	174,5
d	97,5	104,5	105,5	128,0	128,0	128,5
e ø	18,0	18,0	18,0	23,0	23,0	23,0
f	57,5	64,5	70,5	78,0	78,0	80,0
Leiter mm² min	1	1	1	2,5	2,5	2,5
Leiter mm² max	2,5	2,5	2,5	6	6	6

Bals Elektrotechnik GmbH & Co. KG D-57399 Kirchhundem - Albaum
phone: +49(0)2723/771-0 / fax: +49(0)2723/771-177 / email: info@bals.com



Bals Elektrotechnik GmbH & Co. KG D-57399 Kirchhundem - Albaum
phone: +49(0)2723/771-0 / fax: +49(0)2723/771-177 / email: info@bals.com