plug - INNOLINQ lead-free, with QUICK-CONNECT and MULTI-GRIP

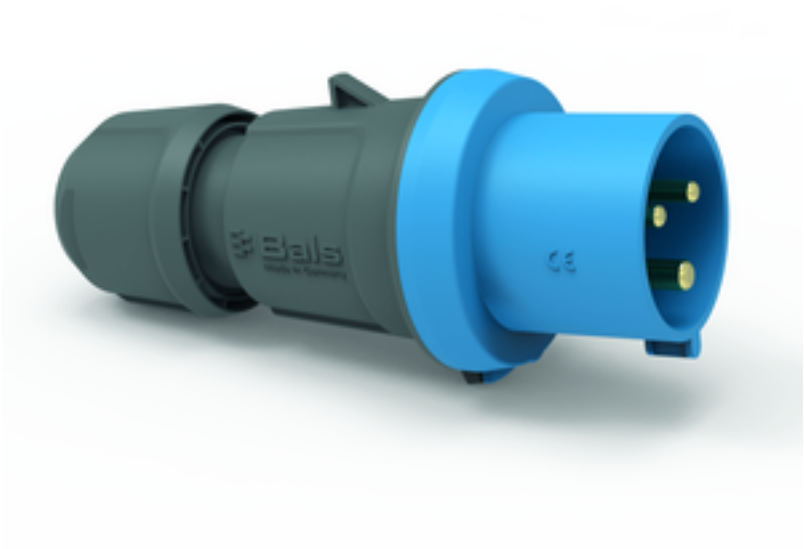

Product description	
BALS-Prd.-Nr	2114
EAN	4024941345835
Product category	Plug INNOLINQ QC
Current	32A
Number of poles	3p
Arangement of phases	2P+PE
Position of earth contact	6 h
Voltage	200 - 250V~

Bals Elektrotechnik GmbH & Co. KG D-57399 Kirchhundem - Albaum
phone: +49(0)2723/771-0 / fax: +49(0)2723/771-177 / email: info@bals.com

Product description	
Frequency	50/60Hz
Protection degree	IP54
Colour code	blue RAL 5015
Colour of appliance	Collar blue RAL 5015, Housing cover dark grey RAL 7012, Cable gland dark grey RAL 7012
Connection design	screwless spring terminals with KONTEX-ULTRA contact
Maximum conductor size	6,0 qmm
Cable entry	with cable gland
Height	191mm
Width	80mm
Depth	85mm
Material of enclosure	Polyamide
Contacts	The contacts are brass, The contact carrier is made of high temperature resistant material

Additional technical information	
	This product is without any lead
	MULTI-GRIP cable gland with gasket and integrated strain relief, For cable diameter from 13 up to max. 29 mm, The enclosure components are connected without screws and are secured by a snap-lock mechanism.Opening is only possible with a screwdriver.

Logistics data	
Weight/pcs	0.268 kg / Piece

Bals Elektrotechnik GmbH & Co. KG D-57399 Kirchhundem - Albaum
phone: +49(0)2723/771-0 / fax: +49(0)2723/771-177 / email: info@bals.com

Logistics data	
Packaging	Bag
Content amount	1 ST
EAN	4024941345835
Length	85 mm
Width	80 mm
Height	191 mm
Weight	0.269 kg
Volume	1,298.8 ccm
Packaging	Carton
Content amount	10 ST
EAN	4024941345842
Length	295 mm
Width	185 mm
Height	215 mm
Weight	2.844 kg
Volume	9,975 ccm

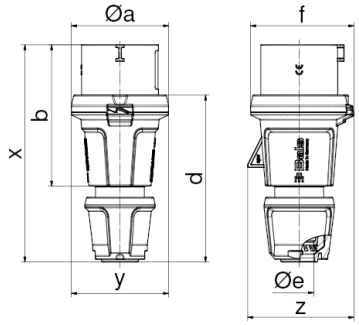

Ampere Polzahl	16 3	16 5	32 3	32 4	32 5
ø a	59,0	71,0	80,0	80,0	80,0
b	94,0	103,0	124,0	124,0	124,0
d	109,0	123,0	145,0	145,0	145,0
ø e	18,0	21,0	29,0	29,0	29,0
f	63,0	76,0	85,0	85,0	85,0
x	145,0	160,0	191,0	191,0	191,0
y	59,0	71,0	80,0	80,0	80,0
z	64,0	78,0	85,0	85,0	89,0
Cond. mm² min	1	1	2,5	2,5	2,5
Cond. mm² max	2,5	2,5	6,0	6,0	6,0

Bals Elektrotechnik GmbH & Co. KG D-57399 Kirchhundem - Albaum
phone: +49(0)2723/771-0 / fax: +49(0)2723/771-177 / email: info@bals.com