angled plug - with short cable sleeve

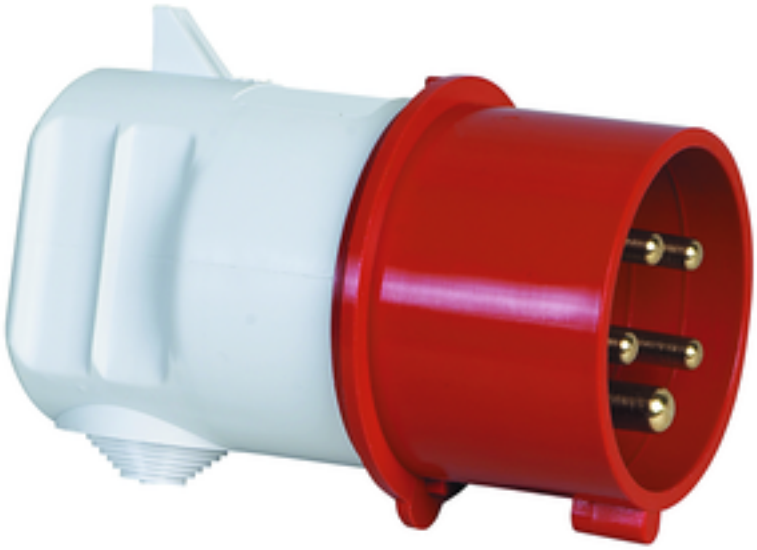

Product description	
BALS-Prd.-Nr	236
EAN	4024941002363
Product category	angled plug
Current	16A
Number of poles	5p
Arangement of phases	3p+N+PE
Position of earth contact	6 h
Voltage	200/346 - 240/415V~
Frequency	50/60Hz

Bals Elektrotechnik GmbH & Co. KG D-57399 Kirchhundem - Albaum
phone: +49(0)2723/771-0 / fax: +49(0)2723/771-177 / email: info@bals.com

Product description	
Protection degree	IP44
Colour code	red RAL 3000
Colour of appliance	anti-kink sleeve grey RAL 7035, Collar red RAL 3000, Housing cover grey RAL 7035
Connection design	with screw terminal
Maximum conductor size	2,5 qmm
Cable entry	Anti-kink sleeve
Height	74mm
Width	64mm
Depth	96mm
Material of enclosure	Polyamide
Contacts	The contacts are brass, The contact carrier is made of polyamide

Additional technical information	
	With short cable sleeve

Logistics data	
Weight/pcs	0.15 kg / Piece
Packaging	Bag
Content amount	1 ST
EAN	4024941002363
Length	96 mm

Bals Elektrotechnik GmbH & Co. KG D-57399 Kirchhundem - Albaum
phone: +49(0)2723/771-0 / fax: +49(0)2723/771-177 / email: info@bals.com

Logistics data	
Width	64 mm
Height	74 mm
Weight	0.151 kg
Volume	454.656 ccm
Packaging	Carton
Content amount	10 ST
EAN	4024941968782
Length	275 mm
Width	175 mm
Height	137 mm
Weight	1.625 kg
Volume	5,737.5 ccm

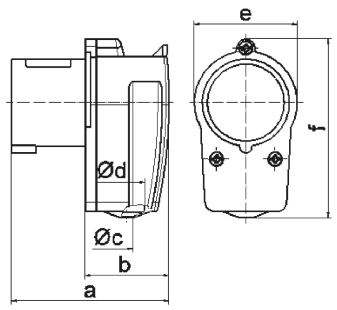

2 MB 12

Ampere Polzahl	16 3	16 4	16 5	32 5
a	80,0	85,0	96,0	116,0
b	44,0	49,0	59,0	70,0
c ø	6,5	6,5	8,0	10,0
d ø	18,0	18,0	18,0	25,0
e	51,0	57,0	64,0	-
f	90,0	95,0	74,0	101,0
Leiter mm^2 min	1	1	1	2,5
Leiter mm^2 max	2,5	2,5	2,5	6

Bals Elektrotechnik GmbH & Co. KG D-57399 Kirchhundem - Albaum
phone: +49(0)2723/771-0 / fax: +49(0)2723/771-177 / email: info@bals.com