plug - INNOLINQ lead-free, with QUICK-CONNECT and MULTI-GRIP

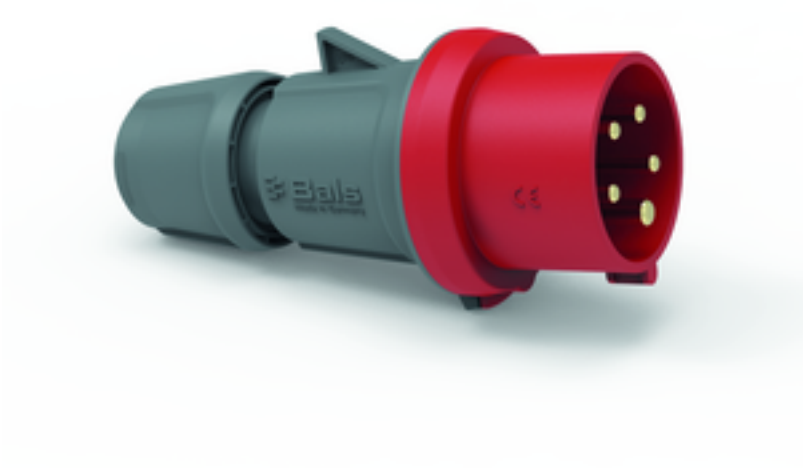

Product description	
BALS-Prd.-Nr	200
EAN	4024941345934
Product category	Plug INNOLINQ QC
Current	16A
Number of poles	5p
Arangement of phases	3p+N+PE
Position of earth contact	6 h
Voltage	200/346 - 240/415V~

Bals Elektrotechnik GmbH & Co. KG D-57399 Kirchhundem - Albaum
phone: +49(0)2723/771-0 / fax: +49(0)2723/771-177 / email: info@bals.com

Product description	
Frequency	50/60Hz
Protection degree	IP54
Colour code	red RAL 3000
Colour of appliance	Cable gland dark grey RAL 7012, Housing cover dark grey RAL 7012, Collar red RAL 3000
Connection design	screwless spring terminals with KONTEX-ULTRA contact
Maximum conductor size	2,5 qmm
Cable entry	with cable gland
Height	160mm
Width	71mm
Depth	78mm
Material of enclosure	Polyamide
Contacts	The contacts are brass, The contact carrier is made of high temperature resistant material

Additional technical information	
	This product is without any lead
	MULTI-GRIP cable gland with gasket and integrated strain relief, The enclosure components are connected without screws and are secured by a snap-lock mechanism.Opening is only possible with a screwdriver., For cable diameter from 10 up to max. 21 mm

Logistics data	
Weight/pcs	0.158 kg / Piece

Bals Elektrotechnik GmbH & Co. KG D-57399 Kirchhundem - Albaum
phone: +49(0)2723/771-0 / fax: +49(0)2723/771-177 / email: info@bals.com

Logistics data	
Packaging	Carton
Content amount	10 ST
EAN	4024941345941
Length	245 mm
Width	177 mm
Height	185 mm
Weight	1.713 kg
Volume	7,140 ccm

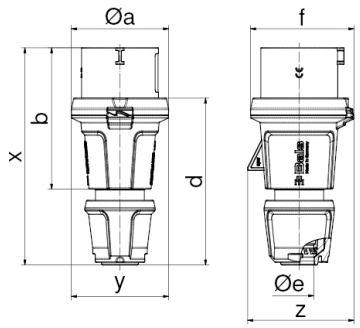

Ampere Polzahl	16 3	16 5	32 3	32 4	32 5
ø a	59,0	71,0	80,0	80,0	80,0
b	94,0	103,0	124,0	124,0	124,0
d	109,0	123,0	145,0	145,0	145,0
ø e	18,0	21,0	29,0	29,0	29,0
f	63,0	76,0	85,0	85,0	85,0
x	145,0	160,0	191,0	191,0	191,0
y	59,0	71,0	80,0	80,0	80,0
z	64,0	78,0	85,0	85,0	89,0
Cond. mm² min	1	1	2,5	2,5	2,5
Cond. mm² max	2,5	2,5	6,0	6,0	6,0

Bals Elektrotechnik GmbH & Co. KG D-57399 Kirchhundem - Albaum
phone: +49(0)2723/771-0 / fax: +49(0)2723/771-177 / email: info@bals.com



Bals Elektrotechnik GmbH & Co. KG D-57399 Kirchhundem - Albaum
phone: +49(0)2723/771-0 / fax: +49(0)2723/771-177 / email: info@bals.com