plug - with screw terminals one piece housing

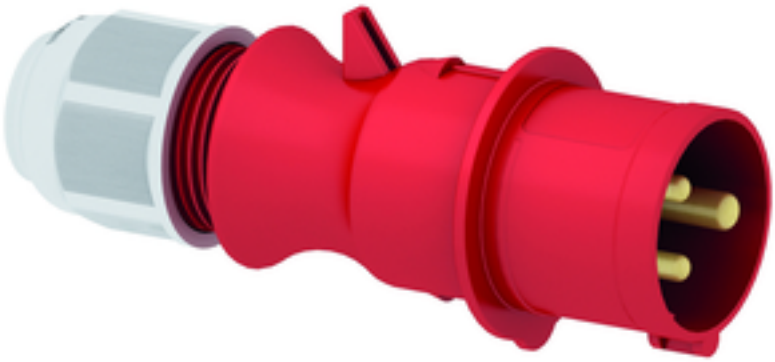

Product description	
BALS-Prd.-Nr	21002-TLS
EAN	4024941193153
Product category	TLS plug with MULTI-GRIP cable gland
Current	16A
Number of poles	3p
Arangement of phases	2P+PE
Position of earth contact	9 h
Voltage	380 - 415V~
Frequency	50/60Hz

Bals Elektrotechnik GmbH & Co. KG D-57399 Kirchhundem - Albaum
phone: +49(0)2723/771-0 / fax: +49(0)2723/771-177 / email: info@bals.com

Product description	
Protection degree	IP44
Colour code	red RAL 3000
Colour of appliance	Cable gland grey RAL 7035, Enclosure red RAL 3000
Connection design	with screw terminal
Maximum conductor size	2,5 qmm
Cable entry	with cable gland
Height	143mm
Width	54mm
Depth	59mm
Material of enclosure	Polyamide
Contacts	The contact carrier is made of polyamide, The contacts are brass

Additional technical information	
	For cable diameter from 8 up to max. 18 mm, MULTI-GRIP cable gland with gasket and integrated strain relief, one piece housing

Logistics data	
Weight/pcs	0.116 kg / Piece
Packaging	Bag
Content amount	1 ST
EAN	4024941193153
Length	59 mm

Bals Elektrotechnik GmbH & Co. KG D-57399 Kirchhundem - Albaum
phone: +49(0)2723/771-0 / fax: +49(0)2723/771-177 / email: info@bals.com

Logistics data	
Width	54 mm
Height	143 mm
Weight	0.117 kg
Volume	455.598 ccm
Packaging	Carton
Content amount	10 ST
EAN	4024941971355
Length	207 mm
Width	162 mm
Height	142 mm
Weight	1.26 kg
Volume	3,750 ccm

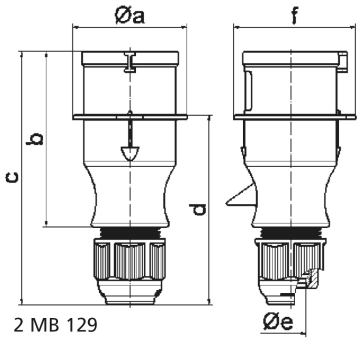

Ampere	16	16	16	32	32	32
Polzahl	3	4	5	3	4	5
a ø	54,0	60,0	66,0	71,0	71,0	80,0
b	94,5	98,0	101,0	115,0	115,0	119,0
c	138,0	142,0	145,0	170,0	170,0	174,0
d	101,5	105,5	108,5	124,0	124,0	128,0
e ø	18,0	18,0	18,0	23,0	23,0	23,0
f	56,6	64,0	71,0	76,0	76,0	85,0
Leiter mm² min	1	1	1	2,5	2,5	2,5
Leiter mm² max	2,5	2,5	2,5	6	6	6

Bals Elektrotechnik GmbH & Co. KG D-57399 Kirchhundem - Albaum
phone: +49(0)2723/771-0 / fax: +49(0)2723/771-177 / email: info@bals.com