panel mounting socket outlet, straight - flange 107x100 fixing centers 85x77



Product description	
BALS-Prd.-Nr	13104
EAN	4024941131049
Product category	Panel mounting socket outlet, straight
Current	63A
Number of poles	5p
Arangement of phases	3p+N+PE
Position of earth contact	6 h
Voltage	200/346 - 240/415V~

Bals Elektrotechnik GmbH & Co. KG D-57399 Kirchhundem - Albaum
phone: +49(0)2723/771-0 / fax: +49(0)2723/771-177 / email: info@bals.com

Product description	
Frequency	50/60Hz
Protection degree	IP67/69
Colour code	red RAL 3000
Colour of appliance	Hinged lid red RAL 3000, Enclosure grey RAL 7035, Bayonet ring grey RAL 7035
Connection design	screw terminal as box terminal with Kontex-contact
Maximum conductor size	25.0 qmm
Cable entry	other
Height	114mm
Width	111mm
Depth	133mm
Flange size vertical in mm	107mm
Flange size horizontal in mm	100mm
Drill hole dist. vertical mm	85mm
Drill hole dist. horizontal mm	77mm
Material of enclosure	Polyamide
Contacts	the contacts are brass nickel plated, The contact carrier is made of high temperature resistant material

Logistics data	
Weight/pcs	0.535 kg / Piece
Packaging	Bag
Content amount	1 ST

Bals Elektrotechnik GmbH & Co. KG D-57399 Kirchhundem - Albaum
phone: +49(0)2723/771-0 / fax: +49(0)2723/771-177 / email: info@bals.com

Logistics data	
EAN	4024941131049
Length	133 mm
Width	111 mm
Height	114 mm
Weight	0.536 kg
Volume	1,682.982 ccm
Packaging	Carton
Content amount	5 ST
EAN	4024941955140
Length	295 mm
Width	185 mm
Height	215 mm
Weight	2.839 kg
Volume	9,975 ccm

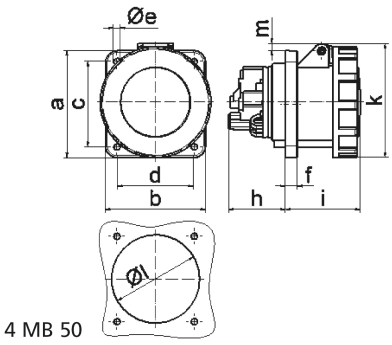

Ampere Polzahl	63 3	63 4	63 5
a	107,0	107,0	107,0
b	100,0	100,0	100,0
c	85,0	85,0	85,0
d	77,0	77,0	77,0
e ø	6,5	6,5	6,5
f	12,0	12,0	12,0
h	56,5	56,5	56,5
i	76,0	76,0	76,0
k	113,0	113,0	113,0
l ø	88,0	88,0	88,0
m	7,0	7,0	7,0
Leiter mm² min	6	6	6
Leiter mm² max	25	25	25

Bals Elektrotechnik GmbH & Co. KG D-57399 Kirchhundem - Albaum
phone: +49(0)2723/771-0 / fax: +49(0)2723/771-177 / email: info@bals.com