Panel mounting socket outlet straight - flange 75x75 fixing centers 60x60



Product description	
BALS-Prd.-Nr	1333
EAN	4024941013338
Product category	Panel mounting socket outlet, straight
Current	32A
Number of poles	5p
Arangement of phases	3p+N+PE
Position of earth contact	6 h
Voltage	200/346 - 240/415V~

Bals Elektrotechnik GmbH & Co. KG D-57399 Kirchhundem - Albaum
phone: +49(0)2723/771-0 / fax: +49(0)2723/771-177 / email: info@bals.com

Product description	
Frequency	50/60Hz
Protection degree	IP44
Colour code	red RAL 3000
Colour of appliance	Hinged lid red RAL 3000, Enclosure grey RAL 7035
Connection design	with screw terminal
Maximum conductor size	10,0 qmm
Cable entry	other
Height	98mm
Width	75mm
Depth	82mm
Flange size vertical in mm	75mm
Flange size horizontal in mm	75mm
Drill hole dist. vertical mm	60mm
Drill hole dist. horizontal mm	60mm
Material of enclosure	Polyamide
Contacts	The contact carrier is made of polyamide, The contacts are brass

Logistics data	
Weight/pcs	0.203 kg / Piece
Packaging	Bag
Content amount	1 ST

Bals Elektrotechnik GmbH & Co. KG D-57399 Kirchhundem - Albaum
phone: +49(0)2723/771-0 / fax: +49(0)2723/771-177 / email: info@bals.com

Logistics data	
EAN	4024941013338
Length	82 mm
Width	75 mm
Height	98 mm
Weight	0.204 kg
Volume	602.7 ccm
Packaging	Carton
Content amount	10 ST
EAN	4024941827898
Length	245 mm
Width	177 mm
Height	185 mm
Weight	2.163 kg
Volume	7,140 ccm

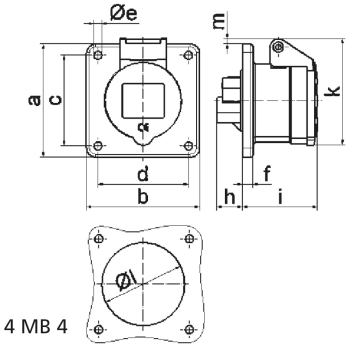

4 MB 4

Ampere Polzahl	16 3	16 4	16 5	32 3	32 4	32 5
a	75,0	750	75,0	75,0	75,0	75,0
b	75,0	75,0	75,0	75,0	75,0	75,0
c	60,0	60,0	60,0	60,0	60,0	60,0
d	60,0	60,0	60,0	60,0	60,0	60,0
e ø	5,5	5,5	5,5	5,5	5,5	5,5
f	7,0	7,0	7,0	8,0	8,0	8,0
h	17,0	26,0	17,0	36,0	36,0	19,0
i	51,0	53,0	53,0	62,0	62,0	62,0
k	70,0	80,0	85,0	90,0	90,0	98,0
l ø	45,0	45,0	55,0	60,0	60,0	60,0
m	3,5	7,0	11,5	12,0	12,0	17,0
Leiter mm² min	1,5	1,5	1,5	2,5	2,5	2,5
Leiter mm² max	4	4	4	10	10	10

Bals Elektrotechnik GmbH & Co. KG D-57399 Kirchhundem - Albaum
phone: +49(0)2723/771-0 / fax: +49(0)2723/771-177 / email: info@bals.com