panel mounting socket outlet, straight - flange 75x75, fixing centers 60x60



Product description	
BALS-Prd.-Nr	13686
EAN	4024941136860
Product category	Panel mounting socket outlet Quick-Connect, straight
Current	16A
Number of poles	3p
Arangement of phases	2P+PE
Position of earth contact	6 h
Voltage	200 - 250V~

Bals Elektrotechnik GmbH & Co. KG D-57399 Kirchhundem - Albaum
phone: +49(0)2723/771-0 / fax: +49(0)2723/771-177 / email: info@bals.com

Product description	
Frequency	50/60Hz
Protection degree	IP44
Colour code	blue RAL 5015
Colour of appliance	Hinged lid blue RAL 5015, Enclosure grey RAL 7035
Connection design	screwless spring terminals with Kontex-Kontakt
Maximum conductor size	4,0 qmm
Cable entry	other
Height	79mm
Width	75mm
Depth	86mm
Flange size vertical in mm	75mm
Flange size horizontal in mm	75mm
Drill hole dist. vertical mm	60mm
Drill hole dist. horizontal mm	60mm
Material of enclosure	Polyamide
Contacts	The contact carrier is made of polyamide, The contacts are brass

Logistics data	
Weight/pcs	0.114 kg / Piece
Packaging	Bag
Content amount	1 ST

Bals Elektrotechnik GmbH & Co. KG D-57399 Kirchhundem - Albaum
phone: +49(0)2723/771-0 / fax: +49(0)2723/771-177 / email: info@bals.com

Logistics data	
EAN	4024941136860
Length	86 mm
Width	75 mm
Height	79 mm
Weight	0.115 kg
Volume	509.55 ccm
Packaging	Carton
Content amount	10 ST
EAN	4024941957670
Length	275 mm
Width	175 mm
Height	137 mm
Weight	1.265 kg
Volume	5,737.5 ccm

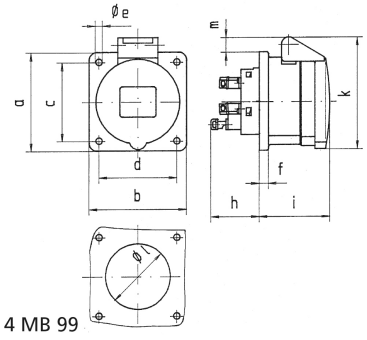

4 MB 99

Ampere Polzahl	16 3	16 4	16 5	32 3	32 4	32 5
a	75,0	75,0	75,0	75,0	75,0	75,0
b	75,0	75,0	75,0	75,0	75,0	75,0
c	60,0	60,0	60,0	60,0	60,0	60,0
d	60,0	60,0	60,0	60,0	60,0	60,0
e ø	5,5	5,5	5,5	5,5	5,5	5,5
f	7,0	7,0	7,0	8,0	8,0	8,0
h	35,5	35,5	35,5	50,0	50,0	50,0
i	50,0	50,0	51,0	60,0	60,0	60,0
k	74,0	84,0	91,0	94,0	94,0	102,0
l ø	45,0	45,0	55,0	60,0	60,0	60,0
m	3,5	7,0	11,5	12,0	12,0	17,0
Leiter mm² min	1,5	1,5	1,5	2,5	2,5	2,5
Leiter mm² max	4	4	4	10	10	10

Bals Elektrotechnik GmbH & Co. KG D-57399 Kirchhundem - Albaum
phone: +49(0)2723/771-0 / fax: +49(0)2723/771-177 / email: info@bals.com