panel mounting socket outlet, angled - flange 100x92, fixing centers 85x77



Product description	
BALS-Prd.-Nr	12854
EAN	4024941128544
Product category	Panel mounting socket outlet Quick-Connect, angled
Current	32A
Number of poles	5p
Arangement of phases	3p+N+PE
Position of earth contact	6 h
Voltage	200/346 - 240/415V~

Bals Elektrotechnik GmbH & Co. KG D-57399 Kirchhundem - Albaum
phone: +49(0)2723/771-0 / fax: +49(0)2723/771-177 / email: info@bals.com

Product description	
Frequency	50/60Hz
Protection degree	IP67/69
Colour code	red RAL 3000
Colour of appliance	Hinged lid red RAL 3000, Bayonet ring grey RAL 7035, Enclosure grey RAL 7035
Connection design	screwless spring terminals with Kontex-Kontakt
Maximum conductor size	10,0 qmm
Cable entry	other
Height	110mm
Width	101mm
Depth	119mm
Flange size vertical in mm	100mm
Flange size horizontal in mm	92mm
Drill hole dist. vertical mm	85mm
Drill hole dist. horizontal mm	77mm
Material of enclosure	Polyamide
Contacts	The contact carrier is made of polyamide, The contacts are brass

Additional technical information	
	The inclination is 20°

Bals Elektrotechnik GmbH & Co. KG D-57399 Kirchhundem - Albaum
phone: +49(0)2723/771-0 / fax: +49(0)2723/771-177 / email: info@bals.com

Logistics data	
Weight/pcs	0.267 kg / Piece
Packaging	Bag
Content amount	1 ST
EAN	4024941128544
Length	119 mm
Width	101 mm
Height	110 mm
Weight	0.268 kg
Volume	1,322.09 ccm
Packaging	Carton
Content amount	10 ST
EAN	4024941968256
Length	122 mm
Width	222 mm
Height	538 mm
Weight	3.008 kg
Volume	14,332.32 ccm

Bals Elektrotechnik GmbH & Co. KG D-57399 Kirchhundem - Albaum
phone: +49(0)2723/771-0 / fax: +49(0)2723/771-177 / email: info@bals.com

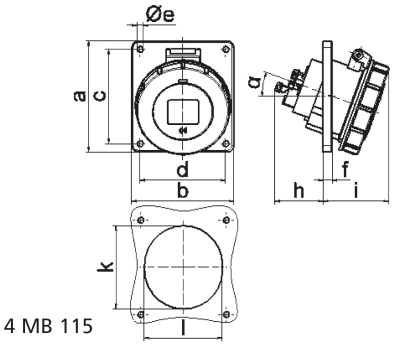

4 MB 115

Ampere Polzahl	16 3	16 4	16 5	32 3	32 4	32 5
a	74,0	100,0	100,0	100,0	100,0	100,0
b	62,0	92,0	92,0	92,0	92,0	92,0
c	60,0	85,0	85,0	85,0	85,0	85,0
d	52,0	77,0	77,0	77,0	77,0	77,0
e ø	5,5	5,5	5,5	5,5	5,5	5,5
f	8,0	8,0	8,0	8,0	8,0	8,0
h	46,0	46,0	46,0	55,0	55,0	55,0
i	57,0	57,0	60,0	65,0	65,0	69,0
k	57,0	65,0	70,0	75,0	75,0	78,0
l	52,0	65,0	70,0	75,0	75,0	78,0
α	20°	20°	20°	20°	20°	20°
Leiter mm² min	1,5	1,5	1,5	2,5	2,5	2,5
Leiter mm² max	4	4	4	10	10	10

Bals Elektrotechnik GmbH & Co. KG D-57399 Kirchhundem - Albaum
phone: +49(0)2723/771-0 / fax: +49(0)2723/771-177 / email: info@bals.com