panel mounting socket outlet, angled - flange 100x92, fixing centers 85x77



Product description	
BALS-Prd.-Nr	12730
EAN	4024941127301
Product category	Panel mounting socket outlet Quick-Connect, angled
Current	16A
Number of poles	5p
Arangement of phases	3p+N+PE
Position of earth contact	6 h
Voltage	200/346 - 240/415V~

Bals Elektrotechnik GmbH & Co. KG D-57399 Kirchhundem - Albaum
phone: +49(0)2723/771-0 / fax: +49(0)2723/771-177 / email: info@bals.com

Product description	
Frequency	50/60Hz
Protection degree	IP44
Colour code	red RAL 3000
Colour of appliance	Hinged lid red RAL 3000, Enclosure grey RAL 7035
Connection design	screwless spring terminals with Kontex-Kontakt
Maximum conductor size	4,0 qmm
Cable entry	other
Height	100mm
Width	92mm
Depth	96mm
Flange size vertical in mm	100mm
Flange size horizontal in mm	92mm
Drill hole dist. vertical mm	85mm
Drill hole dist. horizontal mm	77mm
Material of enclosure	Polyamide
Contacts	The contact carrier is made of polyamide, The contacts are brass

Additional technical information	
	The inclination is 20°

Bals Elektrotechnik GmbH & Co. KG D-57399 Kirchhundem - Albaum
phone: +49(0)2723/771-0 / fax: +49(0)2723/771-177 / email: info@bals.com

Logistics data	
Weight/pcs	0.172 kg / Piece
Packaging	Bag
Content amount	1 ST
EAN	4024941127301
Length	96 mm
Width	92 mm
Height	100 mm
Weight	0.173 kg
Volume	883.2 ccm
Packaging	Carton
Content amount	10 ST
EAN	4024941828000
Length	245 mm
Width	177 mm
Height	185 mm
Weight	1.853 kg
Volume	7,140 ccm

Bals Elektrotechnik GmbH & Co. KG D-57399 Kirchhundem - Albaum
phone: +49(0)2723/771-0 / fax: +49(0)2723/771-177 / email: info@bals.com

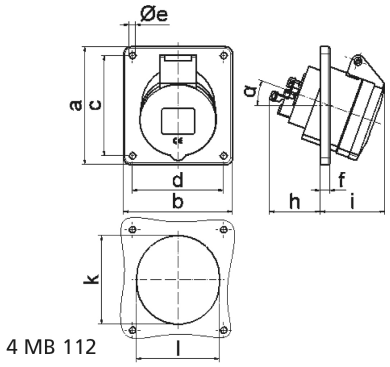

4 MB 112

Ampere Polzahl	16 3	16 4	16 5	32 3	32 4	32 5
a	74,0	100,0	100,0	100,0	100,0	100,0
b	62,0	92,0	92,0	92,0	92,0	92,0
c	60,0	85,0	85,0	85,0	85,0	85,0
d	52,0	77,0	77,0	77,0	77,0	77,0
e ø	5,5	5,5	5,5	5,5	5,5	5,5
f	8,0	8,0	8,0	8,0	8,0	8,0
h	46,0	46,0	46,0	55,0	55,0	55,0
i	48,0	50,0	55,0	68,0	68,0	60,0
k	57,0	65,0	70,0	75,0	75,0	78,0
l	52,0	65,0	70,0	75,0	75,0	78,0
α	20°	20°	20°	20°	20°	20°
Leiter mm² min	1,5	1,5	1,5	2,5	2,5	2,5
Leiter mm² max	4	4	4	10	10	10

Bals Elektrotechnik GmbH & Co. KG D-57399 Kirchhundem - Albaum
phone: +49(0)2723/771-0 / fax: +49(0)2723/771-177 / email: info@bals.com