wall mounting socket outlet - housing dimensions 260x160



Product description	
BALS-Prd.-Nr	11447
EAN	4024941114479
Product category	Wall mounting socket outlet
Current	125A
Number of poles	5p
Arangement of phases	3p+N+PE
Position of earth contact	6 h
Voltage	200/346 - 240/415V~

Bals Elektrotechnik GmbH & Co. KG D-57399 Kirchhundem - Albaum
phone: +49(0)2723/771-0 / fax: +49(0)2723/771-177 / email: info@bals.com

Product description	
Frequency	50/60Hz
Protection degree	IP67/69
Colour code	red RAL 3000
Colour of appliance	Hinged lid red RAL 3000, Housing bottom grey RAL 7035, Housing top grey RAL 7035, Housing screws grey RAL 7035, Bayonet ring grey RAL 7035
Connection design	screw terminal as box terminal with Kontex-contact
Maximum conductor size	70 mm² (possible limitation by the used cable entry)
Cable entry	1xM50 from above
Height	332mm
Width	160mm
Depth	168mm
Dimension of enclosure	260x160 mm (HxW)
Material of enclosure	Polycarbonate
Contacts	The contact carrier is made of high temperature resistant material, the contacts are brass nickel plated

Additional technical information	
	The cable entry is one at top open

Logistics data	
Weight/pcs	2.085 kg / Piece
Packaging	Carton

Bals Elektrotechnik GmbH & Co. KG D-57399 Kirchhundem - Albaum
phone: +49(0)2723/771-0 / fax: +49(0)2723/771-177 / email: info@bals.com

Logistics data	
Content amount	1 ST
EAN	4024941114479
Length	440 mm
Width	225 mm
Height	165 mm
Weight	2.313 kg
Volume	13,545 ccm

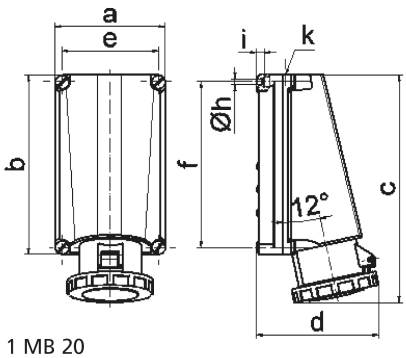

1 MB 20

Ampere Polzahl	125 3	125 4	125 5
a	160,0	160,0	160,0
b	260,0	260,0	260,0
c	330,0	330,0	330,0
d	168,0	168,0	168,0
e	140,0	140,0	140,0
f	240,0	240,0	240,0
h ø	8,3	8,3	8,3
i	10,0	10,0	10,0
k	M50	M50	M50
Leiter mm^2 min	25	25	25
Leiter mm^2 max	70	70	70

Bals Elektrotechnik GmbH & Co. KG D-57399 Kirchhundem - Albaum
phone: +49(0)2723/771-0 / fax: +49(0)2723/771-177 / email: info@bals.com