wall mounting socket outlet - housing dimensions 170x118



Product description	
BALS-Prd.-Nr	110413
EAN	4024941146395
Product category	TE wall mounting socket outlet QUICK-CONNECT
Current	63A
Number of poles	5p
Arangement of phases	3p+N+PE
Position of earth contact	6 h
Voltage	200/346 - 240/415V~

Bals Elektrotechnik GmbH & Co. KG D-57399 Kirchhundem - Albaum
phone: +49(0)2723/771-0 / fax: +49(0)2723/771-177 / email: info@bals.com

Product description	
Frequency	50/60Hz
Protection degree	IP67
Colour code	red RAL 3000
Colour of appliance	Hinged lid red RAL 3000, Housing bottom grey RAL 7035, Housing top grey RAL 7035, Bayonet ring grey RAL 7035
Connection design	screwless spring terminal with box terminals and kontext-contact
Maximum conductor size	25.0 qmm
Cable entry	top entry M40 bottom entry M32
Height	228mm
Width	118mm
Depth	176mm
Dimension of enclosure	170x118 mm (HxW)
Material of enclosure	Polycarbonate
Contacts	The contact carrier is made of high temperature resistant material, the contacts are brass nickel plated

Additional technical information	
	The cable entry is one at top open and two at bottom closed
	Lower part of housing rotatable by 180°

Logistics data	
Weight/pcs	1.005 kg / Piece

Bals Elektrotechnik GmbH & Co. KG D-57399 Kirchhundem - Albaum
phone: +49(0)2723/771-0 / fax: +49(0)2723/771-177 / email: info@bals.com

Logistics data	
Packaging	Bag
Content amount	1 ST
EAN	4024941146395
Length	176 mm
Width	118 mm
Height	228 mm
Weight	1.006 kg
Volume	4,735.104 ccm
Packaging	Carton
Content amount	5 ST
EAN	4024941964838
Length	345 mm
Width	345 mm
Height	217 mm
Weight	5.36 kg
Volume	24,276 ccm

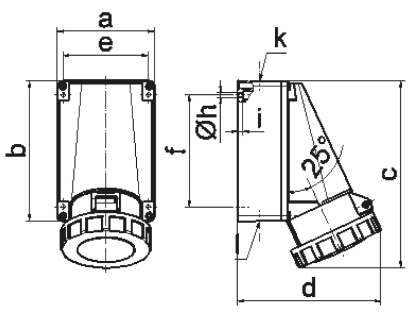

1 MB 3

Ampere	63	63	63			
Polzahl	3	4	5			
a	118,0	118,0	118,0			
b	170,0	170,0	170,0			
c	228,0	228,0	228,0			
d	176,0	176,0	176,0			
e	104,0	104,0	104,0			
f	136,0	136,0	136,0			
h ø	6,1	6,1	6,1			
i	6,0	6,0	6,0			
k	M40	M40	M40			
l	M32/32	M32/32	M32/32			
Leiter mm² min	6	6	6			
Leiter mm² max	25	25	25			

Bals Elektrotechnik GmbH & Co. KG D-57399 Kirchhundem - Albaum
phone: +49(0)2723/771-0 / fax: +49(0)2723/771-177 / email: info@bals.com