wall mounting socket outlet - housing dimensions 170x118



Product description	
BALS-Prd.-Nr	1112
EAN	4024941011129
Product category	Wall mounting socket outlet
Current	63A
Number of poles	5p
Arangement of phases	3p+N+PE
Position of earth contact	6 h
Voltage	200/346 - 240/415V~

Bals Elektrotechnik GmbH & Co. KG D-57399 Kirchhundem - Albaum
phone: +49(0)2723/771-0 / fax: +49(0)2723/771-177 / email: info@bals.com

Product description	
Frequency	50/60Hz
Protection degree	IP67/69
Colour code	red RAL 3000
Colour of appliance	Hinged lid red RAL 3000, Housing bottom grey RAL 7035, Housing top grey RAL 7035, Bayonet ring grey RAL 7035
Connection design	screw terminal as box terminal with Kontex-contact
Maximum conductor size	25.0 qmm
Cable entry	top entry M40 bottom entry M32
Height	228mm
Width	118mm
Depth	176mm
Dimension of enclosure	170x118 mm (HxW)
Material of enclosure	Polycarbonate
Contacts	the contacts are brass nickel plated, The contact carrier is made of polyamide

Additional technical information	
	The cable entry is one at top open and two at bottom closed
	Lower part of housing rotatable by 180°

Logistics data	
Weight/pcs	0.875 kg / Piece

Bals Elektrotechnik GmbH & Co. KG D-57399 Kirchhundem - Albaum
phone: +49(0)2723/771-0 / fax: +49(0)2723/771-177 / email: info@bals.com

Logistics data	
Packaging	Bag
Content amount	1 ST
EAN	4024941011129
Length	176 mm
Width	118 mm
Height	228 mm
Weight	0.876 kg
Volume	4,735.104 ccm
Packaging	Carton
Content amount	5 ST
EAN	4024941942164
Length	345 mm
Width	345 mm
Height	217 mm
Weight	4.71 kg
Volume	24,276 ccm

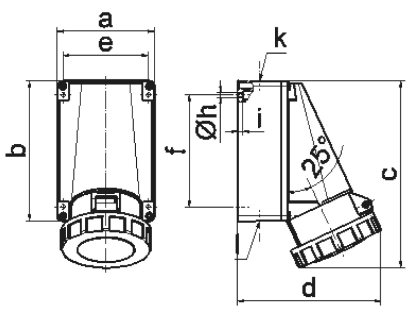

1 MB 3

Ampere	63	63	63			
Polzahl	3	4	5			
a	118,0	118,0	118,0			
b	170,0	170,0	170,0			
c	228,0	228,0	228,0			
d	176,0	176,0	176,0			
e	104,0	104,0	104,0			
f	136,0	136,0	136,0			
h ø	6,1	6,1	6,1			
i	6,0	6,0	6,0			
k	M40	M40	M40			
l	M32/32	M32/32	M32/32			
Leiter mm² min	6	6	6			
Leiter mm² max	25	25	25			

Bals Elektrotechnik GmbH & Co. KG D-57399 Kirchhundem - Albaum
phone: +49(0)2723/771-0 / fax: +49(0)2723/771-177 / email: info@bals.com