combination wall mounting socket outlet - with terminals ready wired for installation with fuse base



Product description	
BALS-Prd.-Nr	1011
EAN	4024941010115
Product category	Combined wall mounting socket outlet
Current	32A
Number of poles	5p
Arangement of phases	3p+N+PE
Position of earth contact	6 h
Voltage	200/346 - 240/415V~

Bals Elektrotechnik GmbH & Co. KG D-57399 Kirchhundem - Albaum
phone: +49(0)2723/771-0 / fax: +49(0)2723/771-177 / email: info@bals.com

Product description	
Frequency	50/60Hz
Protection degree	IP44
Colour code	red RAL 3000
Colour of appliance	Housing bottom grey RAL 7035, Housing top grey RAL 7035
Connection design	with screw terminal
Maximum conductor size	6,0 qmm
Cable entry	1xM25 top, 2xM25 bottom
Height	157mm
Width	83mm
Depth	136mm
Dimension of enclosure	126x83 mm (HxW)
Material of enclosure	plastic
Contacts	The contact carrier is made of polyamide, The contacts are brass

Additional technical information	
	With integrated domestic-type socket outlet 16A 230V AC, German standard type F, The cable entry is one at top open and two at bottom closed
	4 cut out fixing holes in the lower part of housing
	with fuse base 5x20 mm DIN 41671, type 1862, With 3x6mm² terminals with wiring, with fusible link 6,3 A

Bals Elektrotechnik GmbH & Co. KG D-57399 Kirchhundem - Albaum
phone: +49(0)2723/771-0 / fax: +49(0)2723/771-177 / email: info@bals.com

Logistics data	
Weight/pcs	0.536 kg / Piece
Packaging	Bag
Content amount	1 ST
EAN	4024941010115
Length	136 mm
Width	83 mm
Height	157 mm
Weight	0.537 kg
Volume	1,772.216 ccm
Packaging	Carton
Content amount	10 ST
EAN	4024941959254
Length	330 mm
Width	216 mm
Height	260 mm
Weight	5.586 kg
Volume	17,062.5 ccm

Bals Elektrotechnik GmbH & Co. KG D-57399 Kirchhundem - Albaum
phone: +49(0)2723/771-0 / fax: +49(0)2723/771-177 / email: info@bals.com

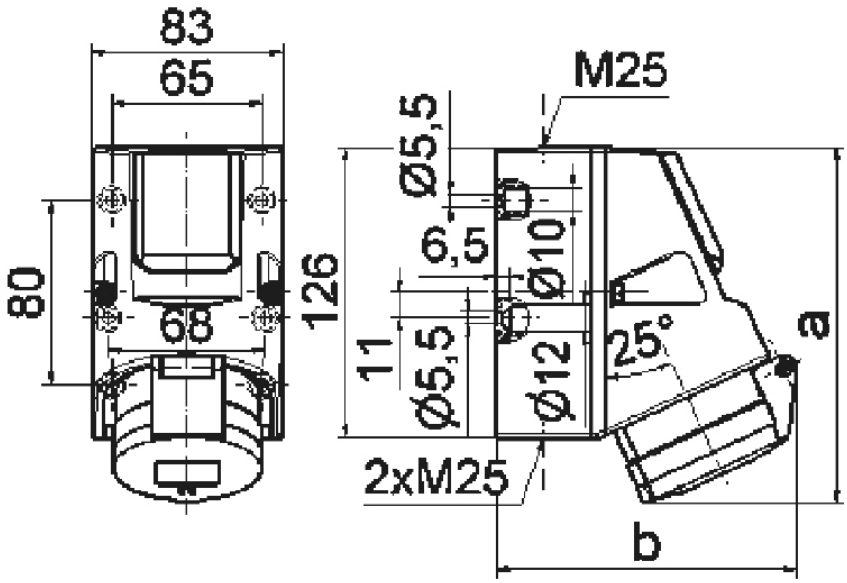

	16A		32A	
	4p	5p	4p	5p
a	154	155	156	157
b	127	130	130	136

1 MB 17

Bals Elektrotechnik GmbH & Co. KG D-57399 Kirchhundem - Albaum
phone: +49(0)2723/771-0 / fax: +49(0)2723/771-177 / email: info@bals.com