Empty enclosure

GEOS-L 4050-22-to



GEOS-L 4050-22-to

Empty enclosure

CUSTOMIZABLE

Productnumber: 70174501
Dimensions: 400 x 500 x 226 mm

Empty enclosure, suitable for installation in harsh environments and exposed outsite areas, base: glass fibre reinforced polycarbonate, grey, similar to RAL 7035, cover: Polycarbonate

with transparent cover

Technical Data

electrical characteristics

Rated insulation voltage AC:	1000 V
Rated insulation voltage DC:	1500 V
Protection class:	II
Type of protection:	IP66/IP67/IP69
vented:	no
UL Type Rating:	4X, 12/12K

Colours

Base unit colour:	grey
Cover colour:	transparent

Dimensions

Width:	400 mm
Length:	500 mm
Height:	226 mm
Inner length:	471 mm
Inner width:	371 mm
Inner height:	204 mm
Weight:	3.71 kg

Material characteristics

UV-resistant:	yes
Halogen free:	yes
Flammability class according with UL94:	V2
Glow-wire flammability according to EN 60695-2-11:	960 °C

mechanical properties

Type of fastening:	Wall/ceiling mounting
Impact strength:	IK09

mechanical properties

Sealable:	yes
Flange variant:	no
Stackable:	yes
with fastening points in the cover:	yes
Type of top part:	Cover

Ambient conditions

max. relative humidity 25°C:	95 %
max. relative humidity 40°C:	50 %
Min. ambient temperature:	-35 °C
Max. ambient temperature:	80 °C
24h ambient temperature:	60 °C
Installation location:	unprotected outdoor areas

Sales Information

EAN:	4013902610952
Packing Unit Code:	CT
ETIM Class:	EC000261
Custom tariff number:	85389099

Material

Base unit material:	Polycarbonate, glass-fibre reinforced
Cover material:	Polycarbonate
Entry material:	not relevant
Sealing material:	Silicone
Cover screw material:	Polyamide, glass-fibre reinforced

Certificates

Test mark:	UL (UL 50 & CSA 22.2 No. 94.1-15, UL 50E & CSA C22.2 No. 94.2-15)
Test mark:	UL-EU (EN 62208)
Test mark:	UL-EU (EN 61439-1/-2)
Test mark:	UL-EU (EN 61439-1/-3)
Test mark:	UL-EU (EN 61439-1 & EN IEC 61439-7)
Test mark:	DLG (Ammonia resistance)
Test mark:	DNV (Class: Ships and Offshore Installations)

Mounting plate

GEOS MPI-4050

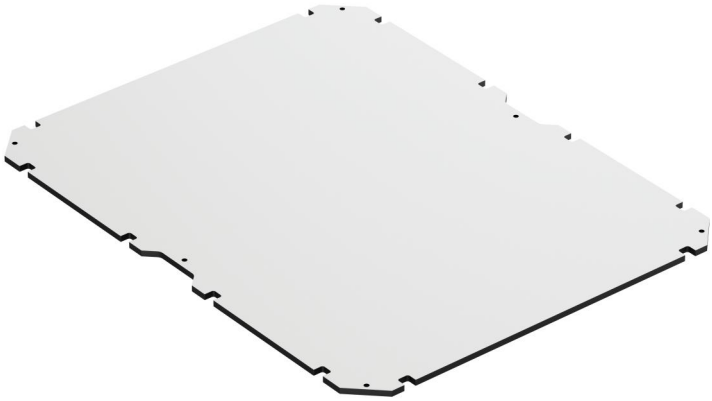

GEOS MPI-4050

Mounting plate

Productnumber: 72000501
Dimensions: 350 x 450 x 5 mm

Mounting plate made of insulating material, incl. fixing screws, for bottom mounting, optional mounting with mounting holder at various heights possible

for GEOS-L/S 4050-22, GEOS-S 5040-22

Created at 11.03.2025. All statements without guarantee. We reserve the right to make improvements to technical progress.
Günther Spelsberg GmbH + Co. KG
Im Gewerbepark 1 · D-58579 Schalksmühle · Telefon: +49 (0) 23 55 / 892-0 · Telefax: +49 (0) 23 55 / 892-299

Technical Data

Dimensions

Width:	350 mm
Length:	450 mm
Height:	5 mm
Weight:	1.1371 kg

Sales Information

EAN:	4013902614073
Packing Unit Code:	C62
ETIM Class:	EC000213
Custom tariff number:	39219041

Standard rail

GEOS NS35-250



GEOS NS35-250

Standard rail

Productnumber: 72003101
Dimensions: 35 x 250 x 7,5 mm

Standard rail in accordance with DIN EN 60715, 35 mm width, height 7.5 and 15 mm, including fixing screws, for floor mounting, optional assembly by means of assembly brackets at different heights possible

for GEOS-L/S 3030, GEOS-L/S 3040, GEOS-S 4030, length 250 mm, height 7.5 mm

Created at 11.03.2025. All statements without guarantee. We reserve the right to make improvements to technical progress.
Günther Spelsberg GmbH + Co. KG
Im Gewerbepark 1 · D-58579 Schalksmühle · Telefon: +49 (0) 23 55 / 892-0 · Telefax: +49 (0) 23 55 / 892-299

Technical Data

Dimensions

Width:	35 mm
Length:	250 mm
Height:	7.5 mm
Weight:	0.1 kg

Sales Information

EAN:	4013902614318
Packing Unit Code:	C62
ETIM Class:	EC001285
Custom tariff number:	73089098

Mounting plate

GEOS-L EPD-4050

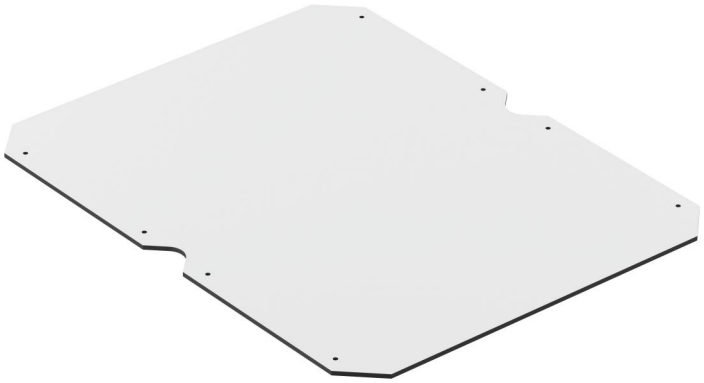

GEOS-L EPD-4050

Mounting plate

Productnumber: 72101801
Dimensions: 376 x 476 x 4 mm

Installation board made of insulating material for mounting on the inside of the cover of empty enclosures, incl. fixing screws, for individual use, e.g. for the installation of command and signalling devices, material thickness: 4 mm

for GEOS-L 4050-22

Günther Spelsberg GmbH + Co. KG
Im Gewerbepark 1 · D-58579 Schalksmühle · Telefon: +49 (0) 23 55 / 892-0 · Telefax: +49 (0) 23 55 / 892-299

Technical Data

Colours

Accessory colour:	light grey

Dimensions

Width:	376 mm
Length:	476 mm
Height:	4 mm
Weight:	1.027 kg

mechanical properties

Type of accessory:	Cover

Sales Information

EAN:	4013902632497
Packing Unit Code:	C62
ETIM Class:	EC002498
Custom tariff number:	39219041

Material

Accessory material:	insulating material

Created at 11.03.2025. All statements without guarantee. We reserve the right to make improvements to technical progress.
Günther Spelsberg GmbH + Co. KG
Im Gewerbepark 1 · D-58579 Schalksmühle · Telefon: +49 (0) 23 55 / 892-0 · Telefax: +49 (0) 23 55 / 892-299

Ventilation element set

BEL Air M40/gr



BEL Air M40/gr

Ventilation element set

Productnumber: 26354001
Dimensions: 85 x 85 x 25 mm

BEL Air ventilation element set, for preventing condensation build-up in enclosure, for vertical installation in enclosure walls and GFL combi flanges with corresponding knock-outs, at least two ventilation elements are required per enclosure

grey, M40, set = 2 pcs., air exchange rate: 30 l / day / set

IP65

Created at 11.03.2025. All statements without guarantee. We reserve the right to make improvements to technical progress.
Günther Spelsberg GmbH + Co. KG
Im Gewerbepark 1 · D-58579 Schalksmühle · Telefon: +49 (0) 23 55 / 892-0 · Telefax: +49 (0) 23 55 / 892-299

Technical Data

electrical characteristics

Type of protection:	IP65
UL Type Rating:	3R

Colours

Accessory colour:	light grey

Dimensions

Width:	85 mm
Length:	85 mm
Height:	25 mm
Weight:	0.0965 kg

Material characteristics

UV-resistant:	yes
Flammability class according with UL94:	V2
Glow-wire flammability according to EN 60695-2-11:	960 °C

mechanical properties

Air through-put:	30 l/d

Ambient conditions

Min. ambient temperature:	-40 °C
Max. ambient temperature:	80 °C
24h ambient temperature:	60 °C
Installation location:	protected outdoor areas

Sales Information

EAN:	4013902699896
Packing Unit Code:	C62
ETIM Class:	EC002498

Sales Information

Custom tariff number:	39269097

Material

Accessory material:	Polycarbonate

Certificates

Test mark:	UL (UL 50 & CSA 22.2 No. 94.1-07, UL 50E & CSA C22.2 No. 94.2-07)

Cable gland

KVR M32 LG-MGM



KVR M32 LG-MGM

Cable gland

Productnumber: 22943201
Dimensions: 40 x 40 x 54 mm

Cable gland, IP68/IP69* with strain relief, long connection thread, M_ x 1.5 mm, with lock nut, polyamide, grey
(*IP69 in conjunction with GEOS series empty enclosures and cabinets and Abox Pro series connection boxes)

Sealing range 11 - 21 mm, Thread length 15 mm

Created at 11.03.2025. All statements without guarantee. We reserve the right to make improvements to technical progress.
Günther Spelsberg GmbH + Co. KG
Im Gewerbepark 1 · D-58579 Schalksmühle · Telefon: +49 (0) 23 55 / 892-0 · Telefax: +49 (0) 23 55 / 892-299

Technical Data

electrical characteristics

Type of protection:	IP68IP69

Colours

Accessory colour:	light grey

Dimensions

Width:	40 mm
Length:	40 mm
Height:	54 mm
Nominal size:	M32
Weight:	0.0309 kg

Material characteristics

UV-resistant:	yes
Halogen free:	yes
Flammability class according with UL94:	V2
Glow-wire flammability according to EN 60695-2-11:	850 °C

mechanical properties

for sealing range min:	11 mm
for sealing range max:	21.0 mm

Ambient conditions

Installation location:	unprotected outdoor areas

Sales Information

EAN:	4013902621279
Packing Unit Code:	C62
ETIM Class:	EC000441
Custom tariff number:	39269097

Material

Accessory material:	Polyamide

Cable gland

KVR M40 LG-MGM



KVR M40 LG-MGM

Cable gland

Productnumber: 22944001
Dimensions: 50 x 50 x 61 mm

Cable gland, IP68/IP69* with strain relief, long connection thread, M_ x 1.5 mm, with lock nut, polyamide, grey
(*IP69 in conjunction with GEOS series empty enclosures and cabinets and Abox Pro series connection boxes)

Sealing range 16 - 28 mm, Thread length 18 mm

Created at 11.03.2025. All statements without guarantee. We reserve the right to make improvements to technical progress.
Günther Spelsberg GmbH + Co. KG
Im Gewerbepark 1 · D-58579 Schalksmühle · Telefon: +49 (0) 23 55 / 892-0 · Telefax: +49 (0) 23 55 / 892-299

Technical Data

electrical characteristics

Type of protection:	IP68IP69

Colours

Accessory colour:	light grey

Dimensions

Width:	50 mm
Length:	50 mm
Height:	61 mm
Nominal size:	M40
Weight:	0.0683 kg

Material characteristics

UV-resistant:	yes
Halogen free:	yes
Flammability class according with UL94:	V2
Glow-wire flammability according to EN 60695-2-11:	850 °C

mechanical properties

for sealing range min:	16 mm
for sealing range max:	28.0 mm

Ambient conditions

Installation location:	unprotected outdoor areas

Sales Information

EAN:	4013902621316
Packing Unit Code:	C62
ETIM Class:	EC000441
Custom tariff number:	39269097

Material

Accessory material:	Polyamide

External fixing lug

GEOS ABL-10/ES



GEOS ABL-10/ES

External fixing lug

Productnumber: 72007501
Dimensions: 35 x 90 x 8,5 mm

External fixing lug set made of V4A stainless steel, mounting possible at an angle of 0° or 90°, set = 4 pieces

Wall distance 10 mm

Technical Data

Colours

Accessory colour:	other

Dimensions

Width:	35 mm
Length:	90 mm
Height:	8.5 mm
Weight:	0.295 kg

mechanical properties

Type of accessory:	other

Ambient conditions

Installation location:	unprotected outdoor areas

Sales Information

EAN:	4013902643707
Packing Unit Code:	C62
ETIM Class:	EC002498
Custom tariff number:	73269098

Material

Accessory material:	Stainless steel V4A

Certificates

Test mark:	UL (UL 50 & CSA 22.2 No. 94.1-15, UL 50E & CSA C22.2 No. 94.2-15)

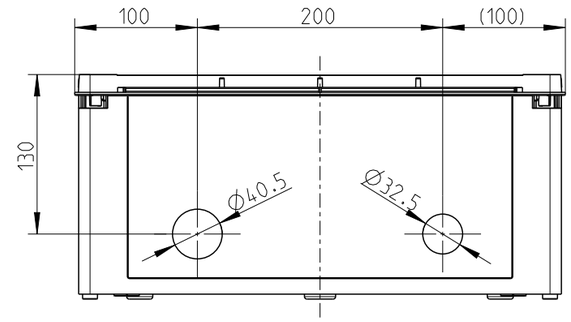

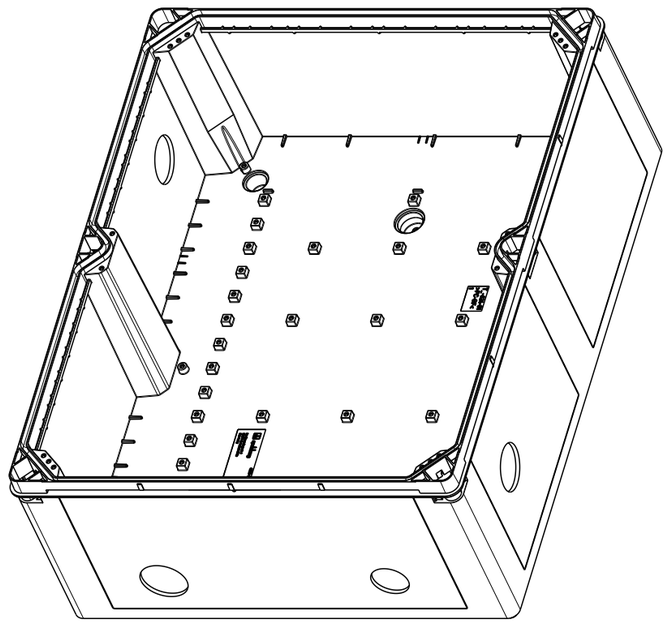

1:5

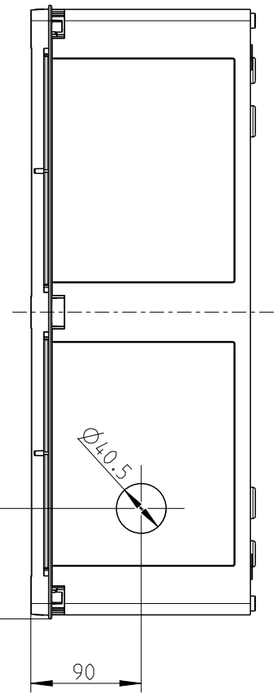

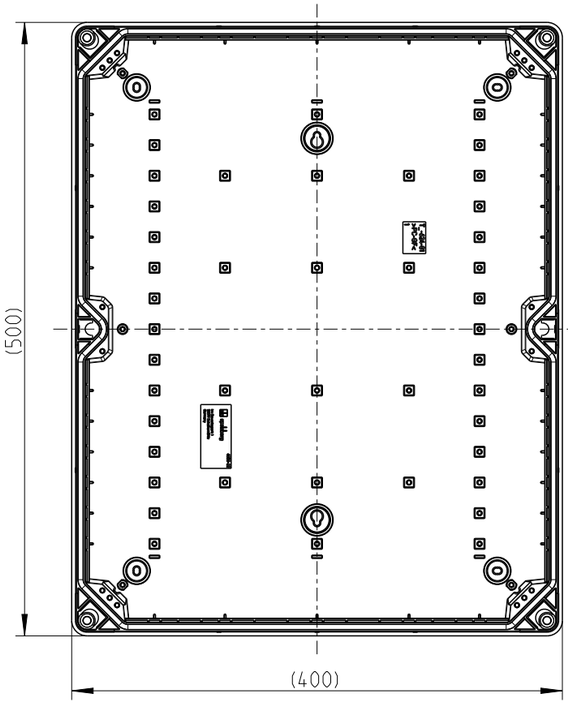

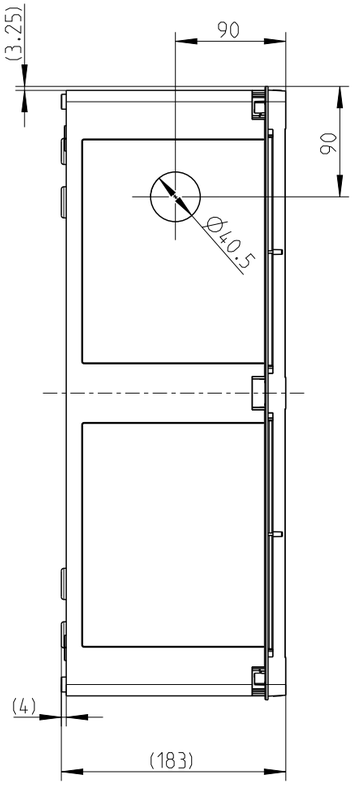

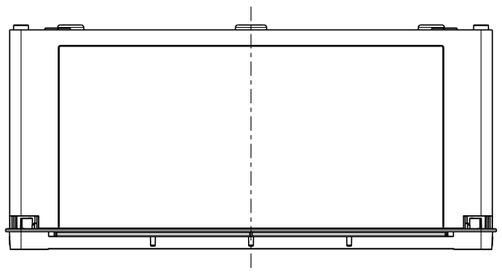

.

Schutzvermerk ISO 16016 beachten.	Maße nach -		Innen-kante -	Außen-kante -	Oberfläche -			Masstab 1:5	Volumen in cm³ 2019.404
	Allgemeintoleranz -		Kanten -	Beschichtung -	Artikel -	Werkstoff, Halbzeuge T5-624-01			
	Dokumentenart Bearbeitungszeichnung				Datum	Name	(Benennung) Kasten GEOS 4050		
	verantwortliche Abteilung Technischer Vertrieb			Bearb.	22.07.24	MBs			
				Prüfer	.	.			
				Status In Bearbeitung			gefräst Reykjafell		
				els spelsberg			Zeichnungsnummer Z24-00000213		A3
	3	von 30.15 geänd.	22.02.19	WSP					
	Rev.	Änderung	Datum	Name	Urspr. .		Ersatz für: .		Blatt 1/1

(Dateiname Modell:) KASTEN-GEOS4050GFR-Z24-00000213 (Dateiname Zeichnung:) KASTEN-GEOS4050GFR-Z24-00000213

Ansicht ohne Deckel und Einbauplatte:

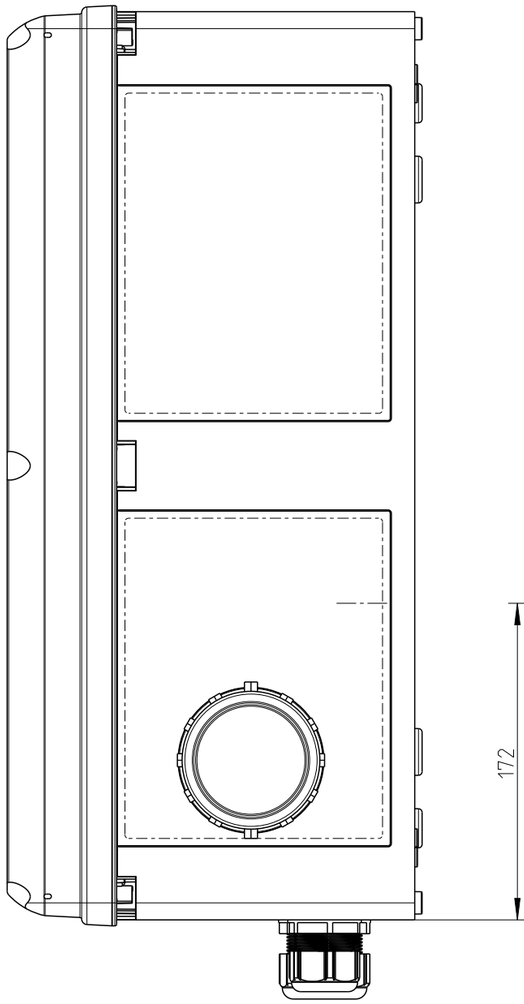

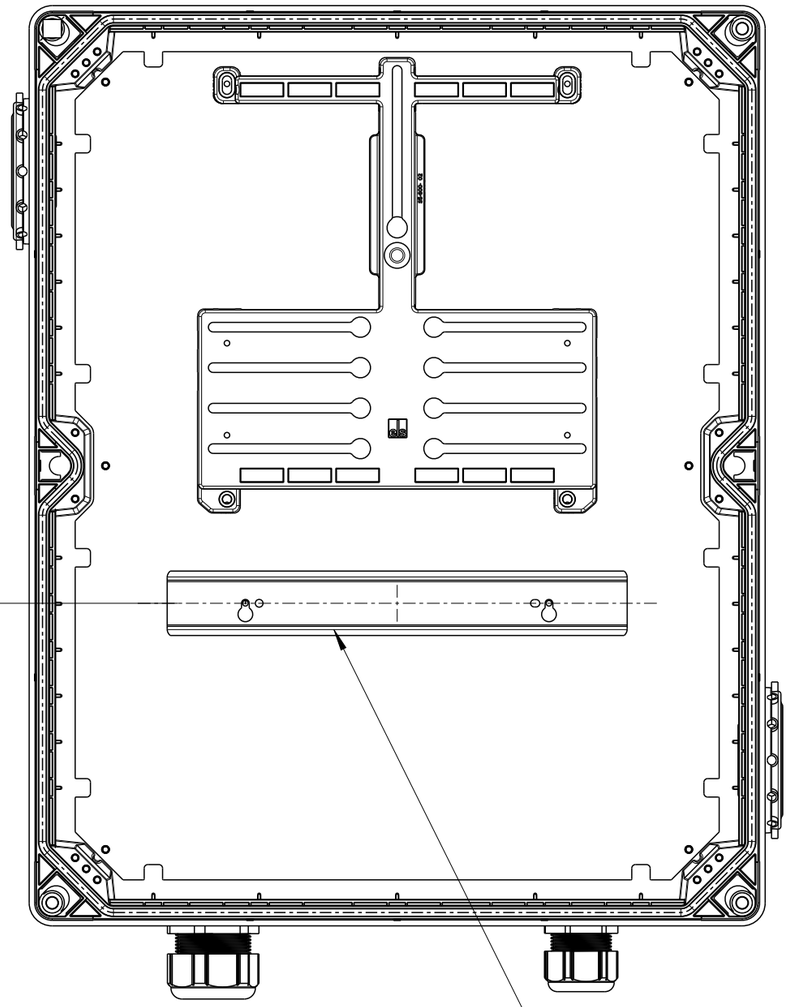



Normschiene bestückt
von links:
1x Endstütze
6x Klemme grau
1x Klemme blau
1x Klemme grün-gelb
1x Endstütze

Schutzvermerk ISO 16016 beachten. Refer to protection notice ISO 16016.

Maßstab / Scale 3:10

els spelsberg

Zusammenbau GEOS4050

.

A3

Z24-00000376

0 In Bearbeitung .

(Dateiname Modell:) KASTEN-GEOS4050-Z24-00000376-BG

(Dateiname Zeichnung:) KASTEN-GEOS4050-Z24-00000376-BG