COMBI 308 BK

Junction box 85x85x51mm, polypropylene, RAL 9005



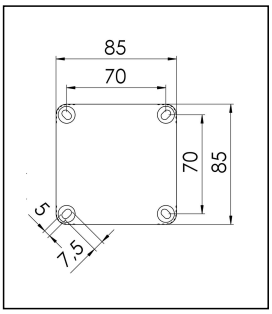

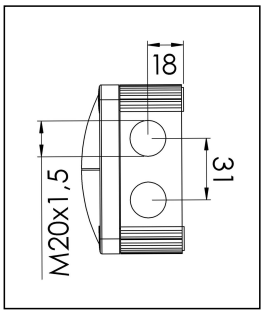

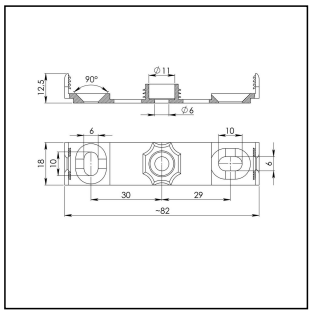

Products may differ in size, colour and appearance to those shown. If you require further information or customisation, please contact us directly.

Material	Polypropylene
Material sealing gasket	TPE
Temp. range min	-30 °C
Temp. range max	100 °C
Temperatures during install.	-5 °C - 60 °C
Protection class	IP66 / IP67
Glow wire test	750 °C
Voltage	400 V
Rated cross section	4 mm²
Fixing	4 internal openings
Ø cable diameter min	3 mm
Ø cable diameter max	12 mm
External dimensions LxWxH	85 x 85 x 51mm
Type of cable gland	M 20 x 1,5
Using for cable gland	
Product Color	RAL 9005
WISKA-Order no.	10060581
Type	COMBI 308 BK
Packing unit	5
ETIM-Classification	EC002600
EAN number	4007685605816
Tariff number	39269097

Remarks:

IP66: using the membrane entry

Your Contact:
WISKA Hoppmann GmbH
Kisdorfer Weg 28 · 24568 Kaltenkirchen · Germany
☎ +49-4191-508-0 · 🖷 +49-4191-508-209
contact@wiska.de · www.wiska.com

Other technical data on request / subject to change without notice

IP67: using the threaded entry together with ESKV cable gland

Equipment:

- 8 M20 threaded membrane entries

- 4 captive cover screws

- including mounting clip

Fixing:

With mounting clip or 4 internal openings outside of the sealing area

Recommended accessories

DIN Rail Kit - COMBI 108/308/TS15	10060362
MP-S Mounting plate small	10105774
MP-L Mounting plate large COMBI / WHK	10105775
External mounting - COMBI LG	10108836
ZER 4-12 LG	10109800
SP-KT-W 221/CSM-3x221-413	22001114
SP-KT-W 221/CSM	22001115
SP-HKT 11/5 Terminal block	22001132

03.06.2026

Your Contact:
WISKA Hoppmann GmbH
Kisdorfer Weg 28 · 24568 Kaltenkirchen · Germany
☎ +49-4191-508-0 · 🖷 +49-4191-508-209
contact@wiska.de · www.wiska.com

Other technical data on request / subject to change without notice

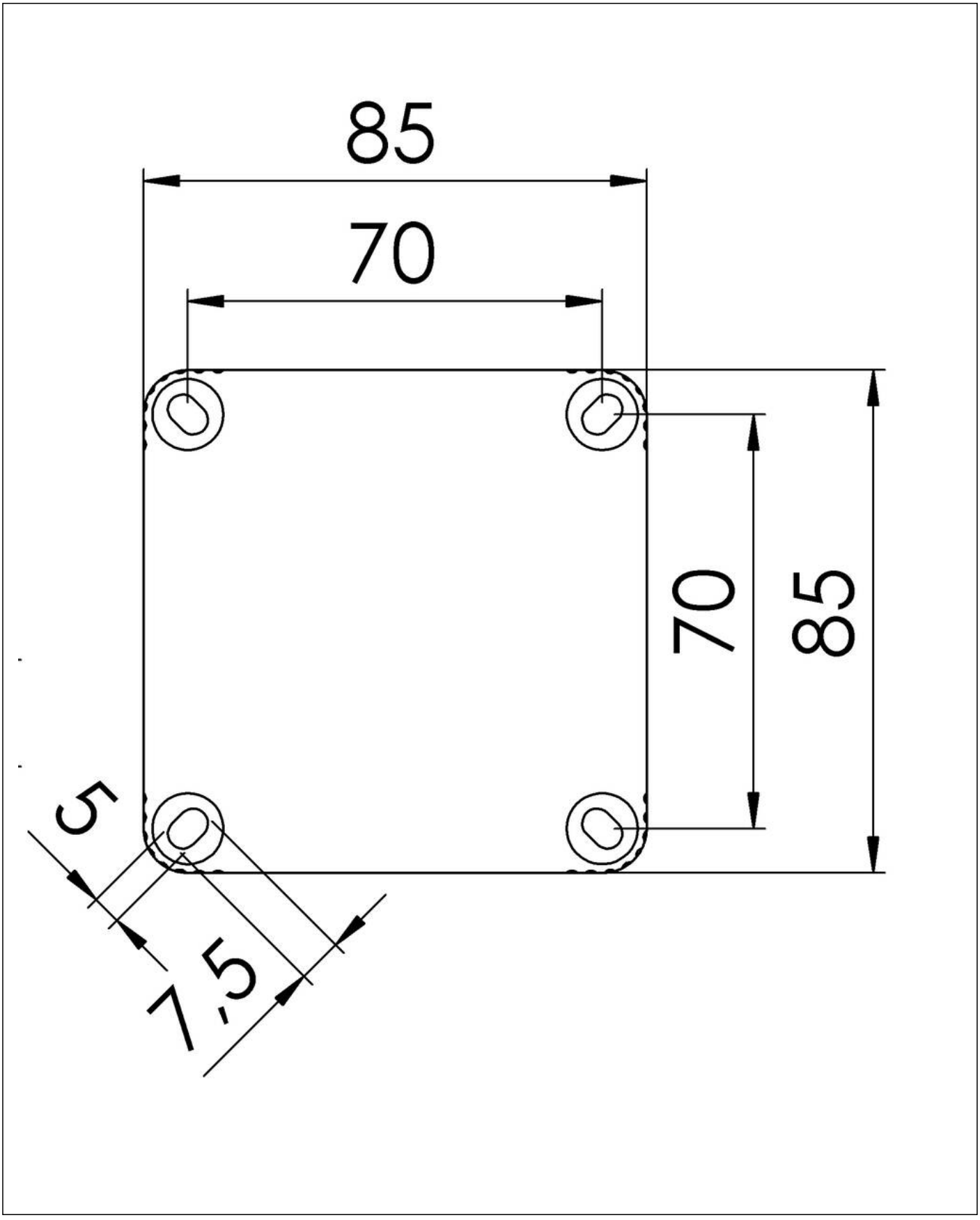

Your Contact:
WISKA Hoppmann GmbH
Kisdorfer Weg 28 · 24568 Kaltenkirchen · Germany
☎ +49-4191-508-0 · 🖷 +49-4191-508-209
contact@wiska.de · www.wiska.com

Other technical data on request / subject to change without notice

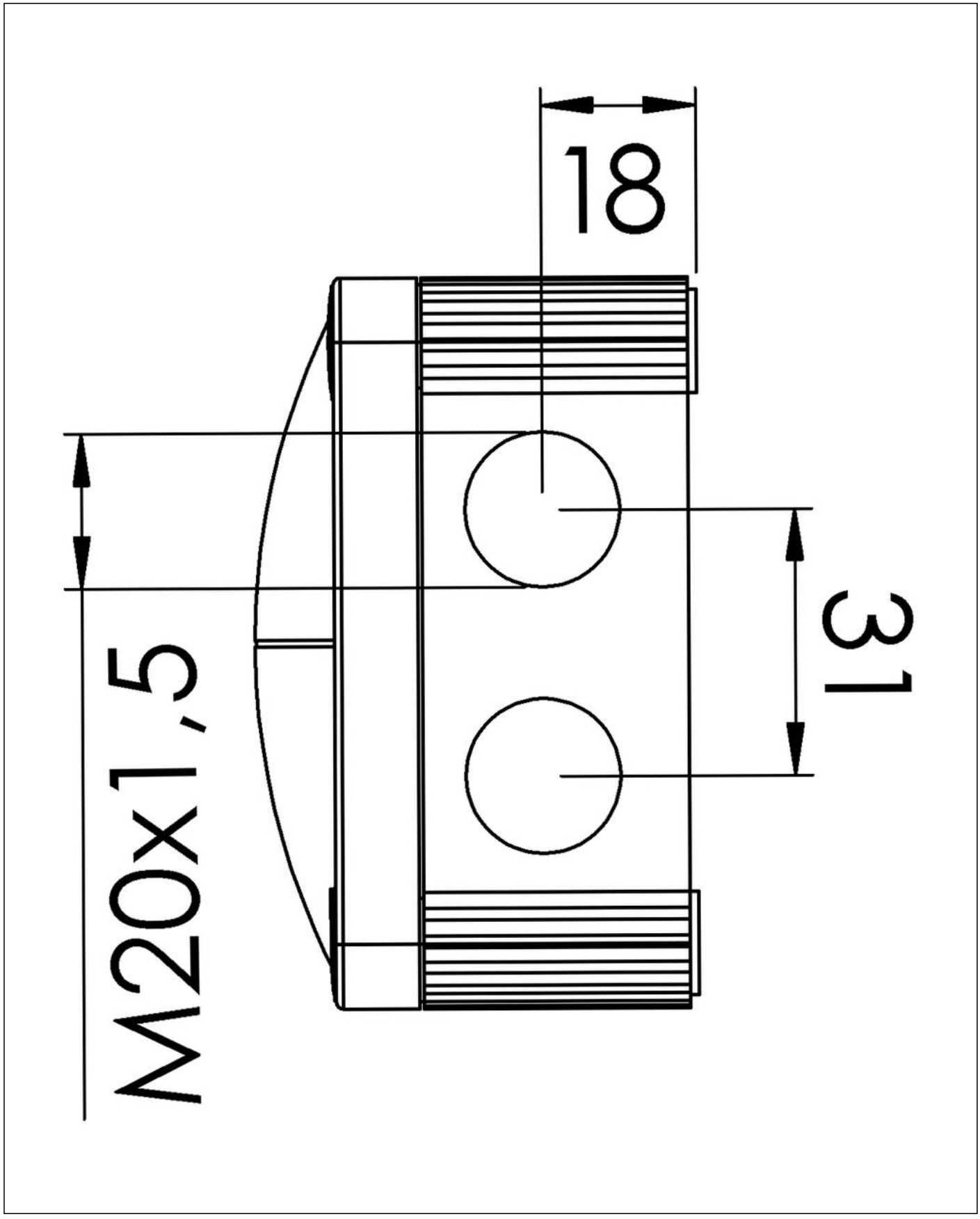

Your Contact:
WISKA Hoppmann GmbH
Kisdorfer Weg 28 · 24568 Kaltenkirchen · Germany
☎ +49-4191-508-0 · 🖷 +49-4191-508-209
contact@wiska.de · www.wiska.com

Other technical data on request / subject to change without notice