COMBI 607 LG

Junction box 110x110x66mm, polypropylene, RAL 7035



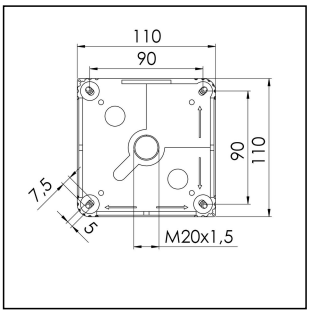

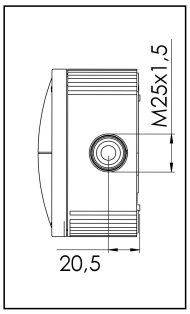

Products may differ in size, colour and appearance to those shown. If you require further information or customisation, please contact us directly.

Material	Polypropylene
Material sealing gasket	TPE
Temp. range min	-30 °C
Temp. range max	100 °C
Temperatures during install.	-5 °C - 60 °C
Protection class	IP66 / IP67
Glow wire test	750 °C
Voltage	690 V
Rated cross section	6 mm²
Fixing	4 internal openings
Ø cable diameter min	5,2 mm
Ø cable diameter max	17 mm
External dimensions LxWxH	110 x 110 x 66mm
Using for cable gland	
Product Color	RAL 7035
WISKA-Order no.	10060531
Type	COMBI 607 LG
Packing unit	3
ETIM-Classification	EC002600
EAN number	4007685605311
Tariff number	39269097

Remarks:

IP66: using the membrane entry

IP67: using the threaded entry together with ESKV cable gland

Your Contact:
WISKA Hoppmann GmbH
Kisdorfer Weg 28 · 24568 Kaltenkirchen · Germany
☎ +49-4191-508-0 · 🖷 +49-4191-508-209
contact@wiska.de · www.wiska.com

Other technical data on request / subject to change without notice

Equipment:

- 7 M25 threaded membrane entries

- 3 membrane cable entries through rear

- 4 captive cover screws

Mounting:

- 4 internal openings outside of the sealing area

Recommended accessories

DIN Rail Kit - COMBI 607/TS 35	10060361
MP-L Mounting plate large COMBI / WHK	10105775
External mounting - COMBI LG	10108836
SP-HKT 607 Terminal block	22000407

03.06.2026

Your Contact:
WISKA Hoppmann GmbH
Kisdorfer Weg 28 · 24568 Kaltenkirchen · Germany
☎ +49-4191-508-0 · 🖷 +49-4191-508-209
contact@wiska.de · www.wiska.com

Other technical data on request / subject to change without notice

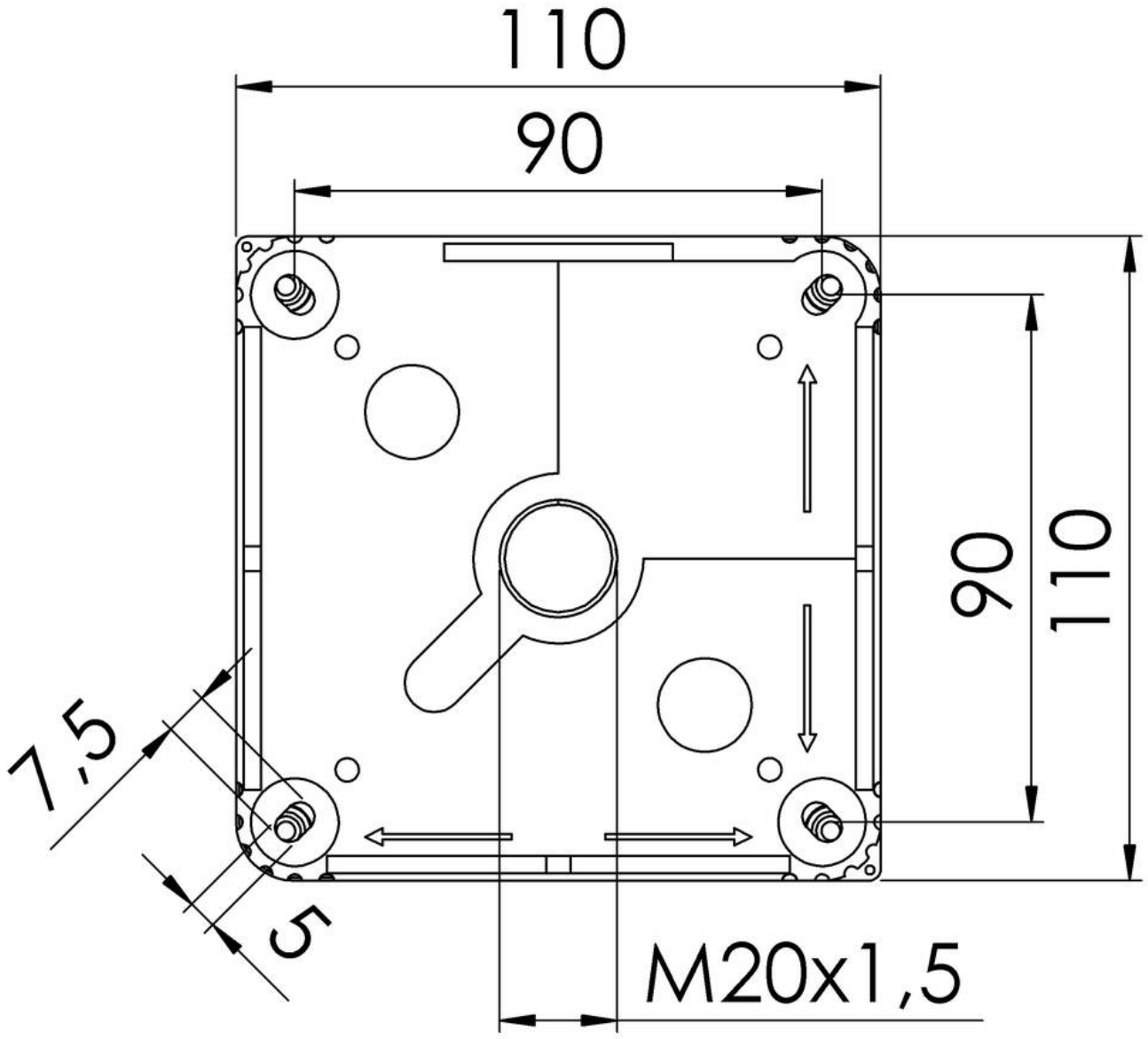

Your Contact:
WISKA Hoppmann GmbH
Kisdorfer Weg 28 · 24568 Kaltenkirchen · Germany
☎ +49-4191-508-0 · 🖷 +49-4191-508-209
contact@wiska.de · www.wiska.com

Other technical data on request / subject to change without notice

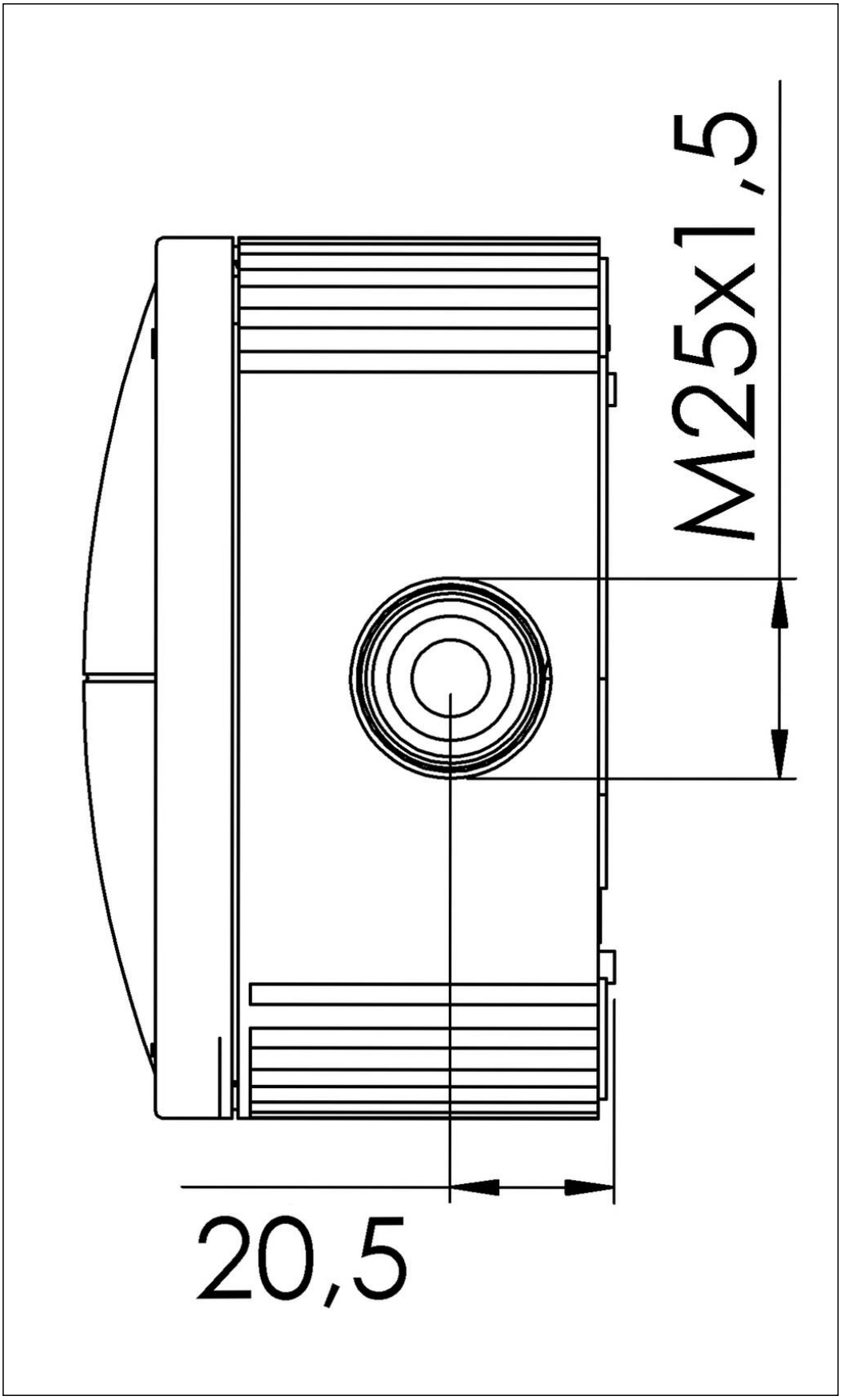

Your Contact:
WISKA Hoppmann GmbH
Kisdorfer Weg 28 · 24568 Kaltenkirchen · Germany
☎ +49-4191-508-0 · 🖷 +49-4191-508-209
contact@wiska.de · www.wiska.com

Other technical data on request / subject to change without notice