# COMBI 407 LG

Junction box 95x95x60mm, polypropylene, RAL 7035


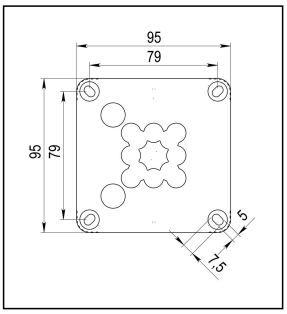

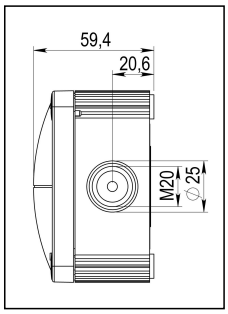

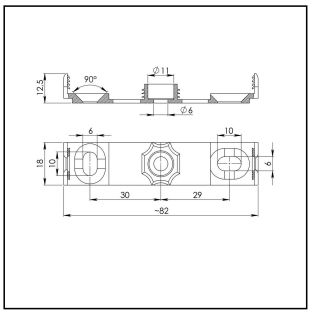

Products may differ in size, colour and appearance to those shown. If you require further information or customisation, please contact us directly.

| | |
|---|---|
| **Material** | Polypropylene |
| **Material sealing gasket** | TPE |
| **Temp. range min** | -30 °C |
| **Temp. range max** | 100 °C |
| **Temperatures during install.** | -5 °C - 60 °C |
| **Protection class** | IP66 / IP67 |
| **Glow wire test** | 750 °C |
| **Voltage** | 690 V |
| **Rated cross section** | 4 mm² |
| **Fixing** | 4 internal openings |
| **Ø cable diameter min** | 3 mm |
| **Ø cable diameter max** | 12 mm |
| **External dimensions LxWxH** | 95 x 95 x 60mm |
| **Type of cable gland** | M 20 x 1,5, M 25 x 1,5 |
| **Using for cable gland** | |
| **Product Color** | RAL 7035 |
| **WISKA-Order no.** | 10105595 |
| **Type** | COMBI 407 LG |
| **Packing unit** | 5 |
| **ETIM-Classification** | EC002600 |
| **EAN number** | 4007686010794 |
| **Tariff number** | 39269097 |

Remarks:

IP66: using the membrane entry

Your Contact:
**WISKA Hoppmann GmbH**
Kisdorfer Weg 28 · 24568 Kaltenkirchen · Germany
☎ +49-4191-508-0 · 🖷 +49-4191-508-209
contact@wiska.de · www.wiska.com



Other technical data on request / subject to change without notice

**IP67: using the threaded entry together with ESKV cable gland**

**Equipment:**

**- 6x M20 threaded membrane entries and 1 middle M20 threaded membrane entry with knockout to M25**

**- 2 membrane cable entries through rear**

**- 4 captive cover screws**

**- including mounting clip**

**Fixing:**

**With mounting clip or 4 internal openings outside of the sealing area**

**Recommended accessories**

| | |
|---|---|
| **DIN Rail Kit - COMBI 407/TS 15** | 10105604 |
| **DIN Rail Kit - COMBI 407/TS 35** | 10105605 |
| **MP-S Mounting plate small** | 10105774 |
| **MP-L Mounting plate large COMBI / WHK** | 10105775 |
| **External mounting - COMBI LG** | 10108836 |
| **ZER 4-12 LG** | 10109800 |
| **SP-KT-W 221/CSM-3x221-413** | 22001114 |
| **SP-KT-W 221/CSM** | 22001115 |
| **SP-HKT 11/5 Terminal block** | 22001132 |

03.06.2026

Your Contact:
**WISKA Hoppmann GmbH**
Kisdorfer Weg 28 · 24568 Kaltenkirchen · Germany
☎ +49-4191-508-0 · 🖷 +49-4191-508-209
contact@wiska.de · www.wiska.com



Other technical data on request / subject to change without notice

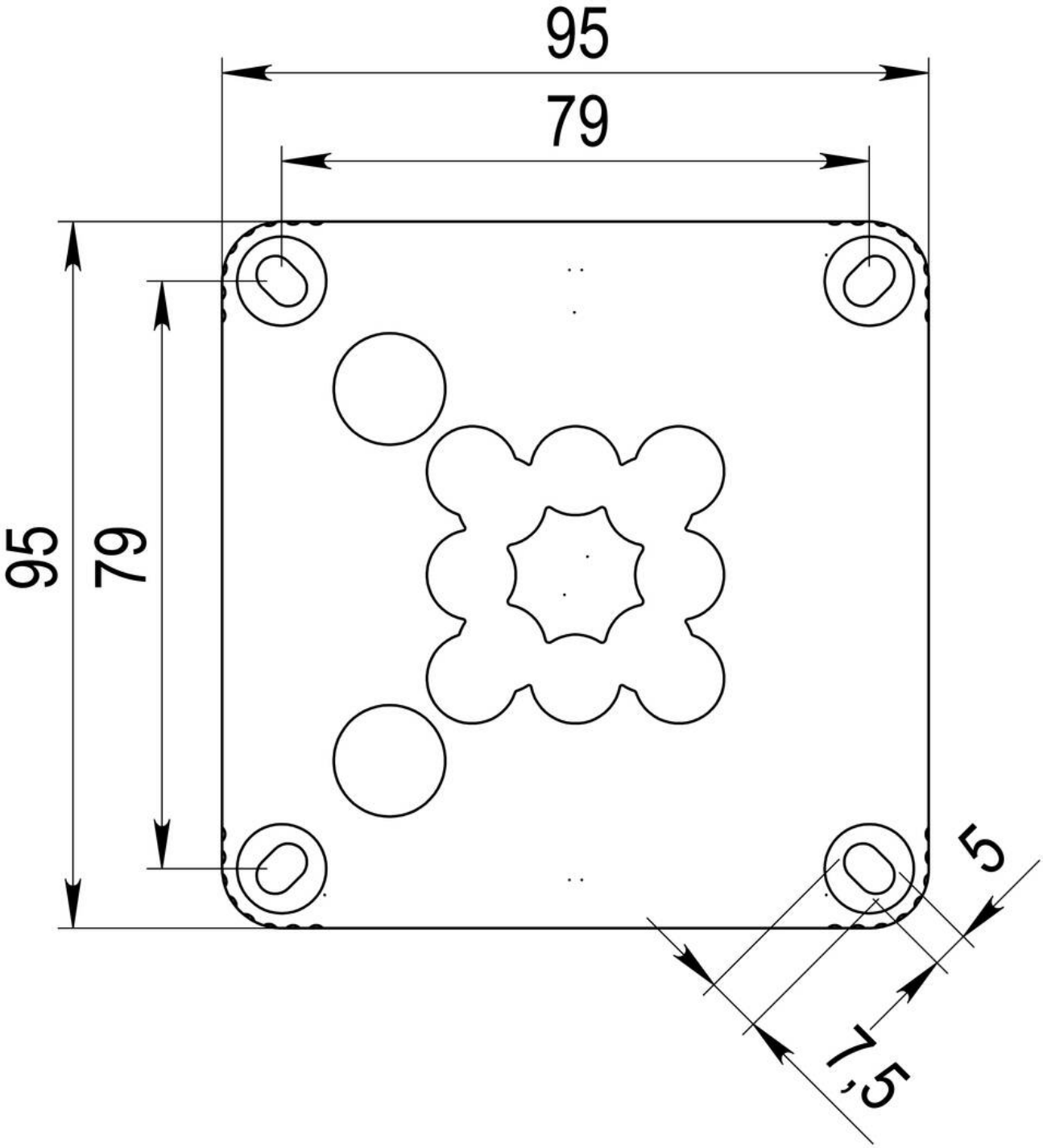


Your Contact:
**WISKA Hoppmann GmbH**
Kisdorfer Weg 28 · 24568 Kaltenkirchen · Germany
☎ +49-4191-508-0 · 🖷 +49-4191-508-209
contact@wiska.de · www.wiska.com



Other technical data on request / subject to change without notice

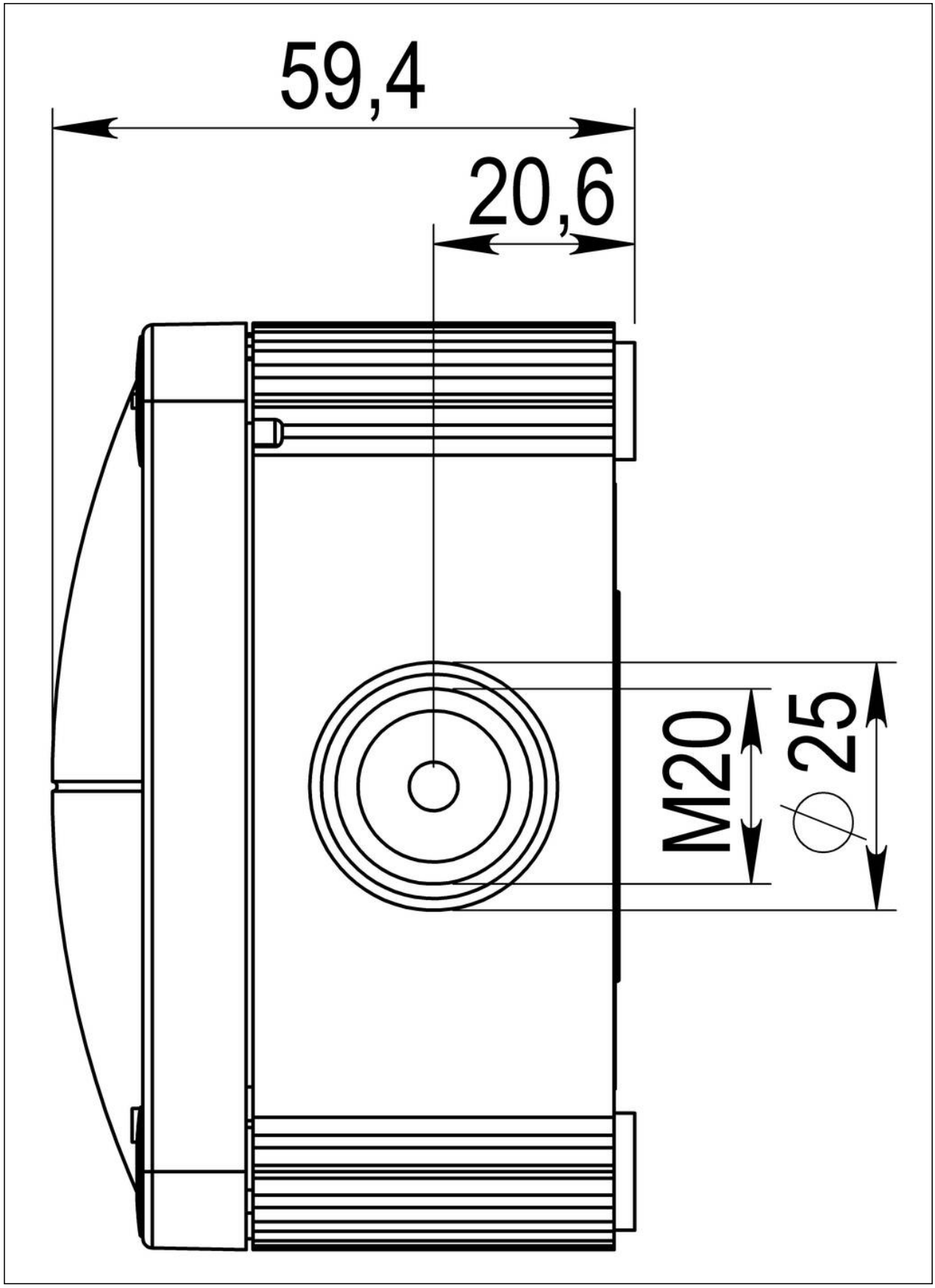


Your Contact:
**WISKA Hoppmann GmbH**
Kisdorfer Weg 28 · 24568 Kaltenkirchen · Germany
☎ +49-4191-508-0 · 🖷 +49-4191-508-209
contact@wiska.de · www.wiska.com



Other technical data on request / subject to change without notice