Small distributions boards

AK 56

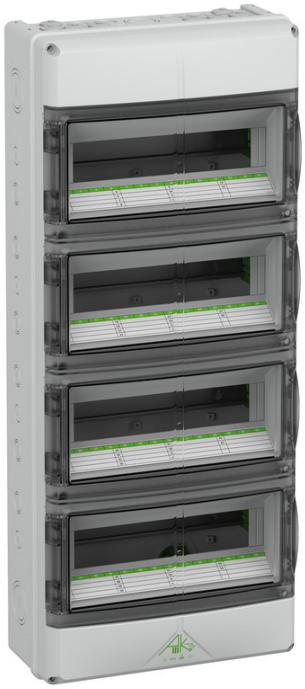

AK 56

Small distributions boards

CUSTOMIZABLE

Productnumber: 73345601
Dimensions: 315 x 750 x 155 mm

Small distributions boards, protection class IP65, 4 rows, 56 available modules, with integrated ventilation elements for reducing the formation of condensation, rated operational voltage: 400V AC, rated insulation voltage: 1000V AC, 1500V DC, certified by VDE (DIN EN 60670-1/-24 (VDE 0606-1/-24)), UL-EU (EN 62208), UL-EU (EN 61439-1/-2), UL-EU (EN 61439-1/-3), UL-EU (EN 61439-1 & EN IEC 61439-7), DLG (Ammonia resistance), metric knockouts on top and bottom for universal cable insertions with cable glands and/or double membrane seals, pre-mounted with double membrane seals M20 at the top, for installations in the industrial environment and protected outside areas

PE/N terminal block, consisting of: PE terminal block with 6 screw terminals 2.5-16 mm² and 21 push-in terminals 0.75-4mm², 4 N-modules (connected with jumper) each with 2 screw terminals 2.5-16 mm² and 6 push-in terminals 0.75-4mm² with operating lever for toolless releasing of the conductors

Accessories supplied:
Double-membrane seals: 2x M16, 10x M20, 4x M25, 2x M32, 2x M40, sealing plugs, masking and labelling strips

Reliable - The high protection class (IP65) and the robust, halogen-free design ensure reliable operation even in a tough industrial environment.

Technical Data

electrical characteristics

Rated operating voltage AC:	400 V
Rated insulation voltage AC:	1000 V
Rated insulation voltage DC:	1500 V
Protection class:	II
Type of protection:	IP65
vented:	yes
Number of N-potentials:	2
Number of rows:	4
Number of modules:	56
Number of modules per row:	14
with N terminal:	yes
with PE terminal:	yes
with additional installation space:	no

Colours

Base unit colour:	grey
Cover colour:	grey

Dimensions

Width:	315 mm
Length:	750 mm
Height:	155 mm
Inner length:	730 mm
Inner width:	295 mm
Inner height:	106 mm
Weight:	5.455 kg

Material characteristics

UV-resistant:	yes
Halogen free:	yes

Material characteristics

Flammability class according with UL94:	V2
Glow-wire flammability:	960 °C (EN 60695-2-11)

mechanical properties

Type of fastening:	Surface mounting
Impact strength:	IK08
Sealable:	yes
Cover screw torque:	1.2 Nm
Flange variant:	no
Stackable:	yes

Ambient conditions

max. relative humidity 25°C:	90 %
max. relative humidity 40°C:	50 %
Min. ambient temperature:	-35 °C
Max. ambient temperature:	80 °C
24h ambient temperature:	60 °C
Installation location:	protected outdoor areas

Sales Information

EAN:	4013902496822
ETIM Class:	EC000214
Custom tariff number:	85369095
Minimum order quantity:	1

Material

Base unit material:	Polycarbonate
Cover material:	Polycarbonate
Sealing material:	Polyurethane
Cover screw material:	Polyamide, glass-fibre reinforced
Hinged window material:	Polycarbonate

Certificates

Test mark:	VDE (DIN EN 60670-1/-24 (VDE 0606-1/-24))
Test mark:	UL-EU (EN 62208)
Test mark:	UL-EU (EN 61439-1/-2)
Test mark:	UL-EU (EN 61439-1/-3)
Test mark:	UL-EU (EN 61439-1 & EN IEC 61439-7)
Test mark:	DLG (Ammonia resistance)

Accessories

79032101 - KLS N 1/14-SL - Plug clamps

79032201 - KLS PE 1/14-SL - Plug clamps

73385001 - AK3 3/14 PE - Terminal rails

73385101 - AK3 6/21 PE - Terminal rails

73385201 - AK3 1/6/1 N - N-Module-Set

73383101 - AK3 KBL - Cable cover

73383401 - AK3 STD - Mounting socket

70610201 - AK SGA-1 - Lock fittings

70690201 - AK SGA-2 - Lock fittings

73381201 - AK3 NS35-14 - Standard rail

73381301 - AK3 NS35-275 - Standard rail

73383001 - AK3 KS M50 - Combination cable gland

19302601 - KST M25-33 - Combi connector

73383201 - AK3 TW - Partition wall

73383301 - AK3 ABL-ES - External fixing lugs

79901201 - AK AS - Masking off strips

79901301 - AK AS-v - Masking off strips

73380501 - AK3 OT 56 - Upper part

73380101 - AK3 KF - Hinged window

Cable gland

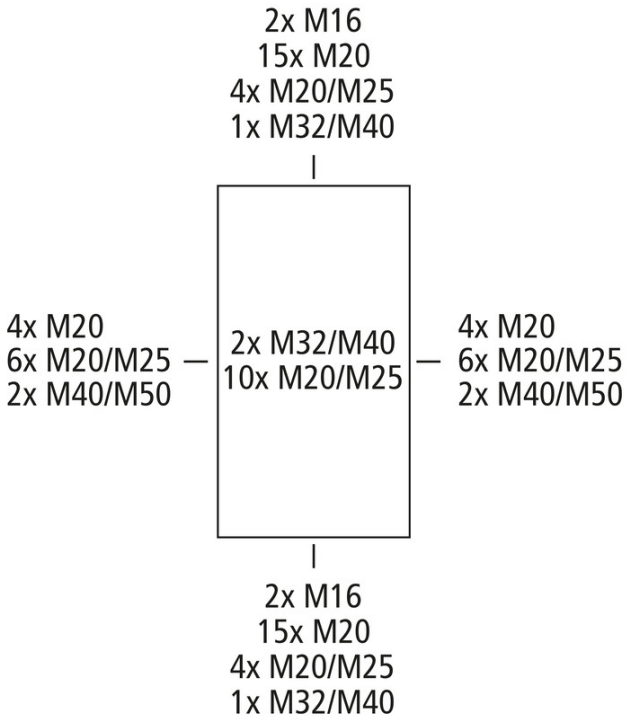
2x M16
15x M20
4x M20/M25
1x M32/M40
4x M20
6x M20/M25
2x M40/M50
2x M32/M40
10x M20/M25
4x M20
6x M20/M25
2x M40/M50
2x M16
15x M20
4x M20/M25
1x M32/M40