OUNEVA GROUP

PRODUCT CARD

14.11.2024

Product data

Product code	**VC03-0003**	STK-code	**1914142**	EAN-code	**6410019141429**
Product name	OLE 185-300			ETIM class	**EC000897**
Wires	1xAl/Cu 185-300 mm²				

Technical data

Nominal current (IEC)	Cu	**560**	A
	Al	**560**	A
Nominal voltage (IEC)		**690**	V
		-	
		-	
		-	
Number of poles		**1**	pcs
Max. Cross section		**300**	mm²
Tightening torque			
	185-300 mm²	**70**	Nm
		-	
		-	
		-	
		-	
Operating temperature		**80**	°C
Weight		**260**	g
IP-protection		**IP20**	
		-	
Color / Material		**Connector Stainless steel/ Tin plated copper; Housing PP66/ PC**	
Mounting / Connection		**Screw**	

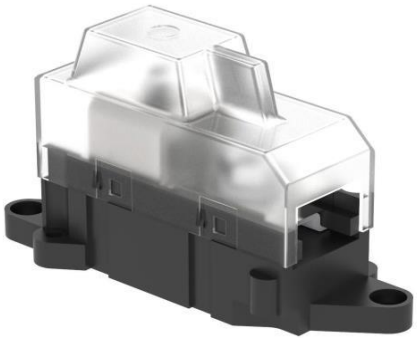

CE RoHS

Description

OLE-connectors are housing equipped OL-connectors. They are designed to be used connecting aluminium and copper conductors. Frames are made of stainless steel and busbars are tin plated copper. OLE-connectors can be mounted side by side with screws to each other.

Drawing

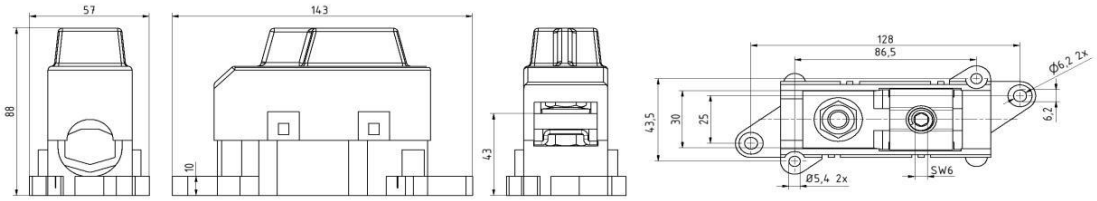

Package

Package	**Box**	Pcs / Package	**8**	Weight [kg]	**3,64**
Length [mm]	**300**	Width [mm]	**205**	Height [mm]	**100**

Ouneva Oy
Teollisuustie 21
FI-82730 Tuupovaara
Finland

www.ounevagroup.fi
www.ounevaproducts.fi