OUNEVA
OUNEVA GROUP

INSTALLATION GUIDE

Product data							
Product code	Product name	$I_{n\ Al}$	$I_{n\ Cu}$	U_n	$I_{max\ Al}$	$I_{max\ Cu}$	U_{max}
VC03-0003	OLE 185-300	560 A	560 A	690 V	-	-	-

Installation

Type **Screw**

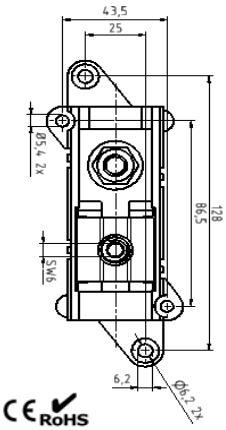

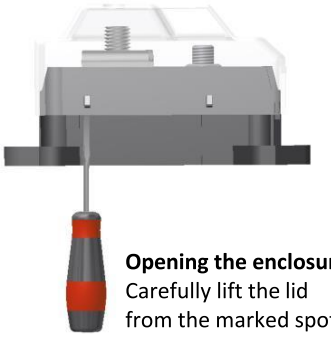

Opening the enclosure
Carefully lift the lid from the marked spots



It is possible to connect several connectors together with screw connection. (Screw size Ø 5,4)



Screw mounting
Max. Screw Ø 6,2

Connection

Screw



Thread	**M12**
SW	**6**

Tightening torque		
	185-300 mm²	**70 Nm**
	-	**-**
	-	**-**
	-	**-**

Max. Wire cross section **300 mm²**

Stripping length **L** **40±2 mm**

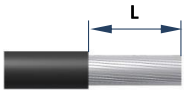

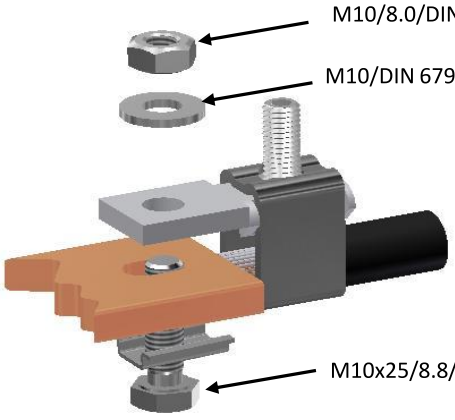

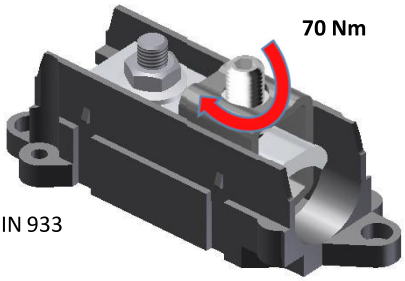

Mounting to busbar
-Recommended torque for M10: 30-44Nm

Installation

Can be used for both **copper- or aluminium conductors**. With the Al-conductors, It's recommended to use anti-corrosion paste. (e.g. Penetrox).
It is allowed to use max. of three adjacent cross-sections in one space (Copper conductors). The nominal max. cross-section value must not be exceeded.

When used Al-conductors, it is allowed to use only one conductor / space.

We recommend a ferrule when using a fine-stranded conductor.



Cross-section of conductors and number of conductors / space. (Al-conductors in parenthesis)

1,5 mm²	2,5 mm²	6 mm²	10 mm²	16 mm²	25 mm²	35 mm²	50 mm²
-	-	-	-	-	-	-	-

Note! The specified amount of conductors refers only to industrially installed terminals.

70 mm²	95 mm²	120 mm²	150 mm²	185 mm²	240 mm²	300 mm²	400 mm²
-	-	-	-	**1(1)**	**1(1)**	**1(1)**	-

Ouneva Oy
Teollisuustie 21
FI-82730 Tuupovaara
Finland
Tel. +358 400 179 750
info@ouneva.fi
www.ounevagroup.fi
www.ounevaproducts.fi