PRODUCT CARD

28.5.2026

Product data

Product code	**VC06-0015**	STK-code	**1912320**	EAN-code	**6410019123203**
Product name	Device connector 1xAl/Cu 16-95 M			ETIM class	**EC001284**
Wires	1xAl/Cu 16-95 mm²				

Technical data

Nominal current (IEC)	Cu	**230**	A
	Al	**180**	A
Nominal voltage (IEC)		**690**	V
		-	
		-	
		-	
Number of poles		**1**	pcs
Max. Cross section		**95**	mm²
Tightening torque			
	16-50 mm²	**12**	Nm
	70-95 mm²	**20**	Nm
	(measurement) Cu 0,75-2,5 mm²	**1-2**	Nm
		-	
		-	
Operating temperature		**80**	°C
Weight		**56**	g
IP-protection		**IP20**	
Standards		**EN 61238-1:2003 ; EN 60947-7-1:2009**	
Color / Material		**Grey Housing RAL 7035/PA66, Tin plated Aluminium**	
Mounting / Connection		**Screw**	



CE RoHS

Description

Device connector is a universal terminal series for connecting Al- and Cu-conductors to equipment. Body is made of tin plated aluminium, housing of polyamide. This model includes measurement connector for up to 2,5mm² cross section conductor.

Drawing

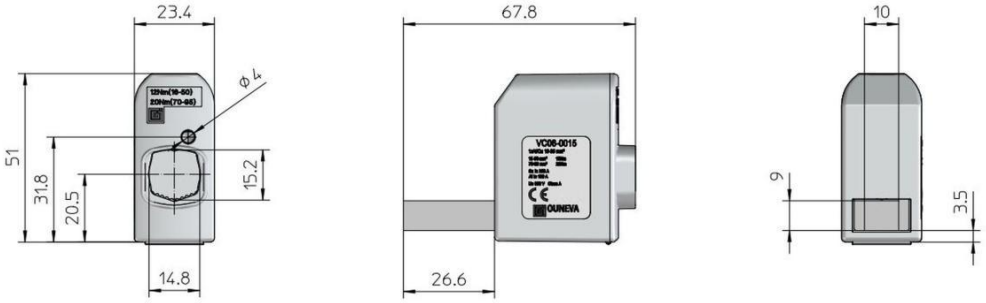

Package

Package	**Box**	Pcs / Package	**30**	Weight [kg]	**1,78**
Length [mm]	**210**	Width [mm]	**155**	Height [mm]	**105**

Ouneva Oy
Teollisuustie 21
FI-82730 Tuupovaara
Finland

www.ounevagroup.fi
www.ounevaproducts.fi