PRODUCT CARD

18.11.2024

Product data

Product code	**VC05-0362**	STK-code	**1914283**	EAN-code	**6410019142839**
Product name	OTL PEN-connector 2xAl/Cu 35-240mm² (Ye/Gr/Blue)			ETIM class	**EC000897**
Wires	2xAl/Cu 35-240 mm²				

Technical data

Nominal current (IEC)	Cu	**850**	A
	Al	**380**	A
Nominal voltage (IEC)		**1000 V AC / 1500 V DC**	
		-	
		-	
		-	
Number of poles		**1**	pcs
Max. Cross section		**240**	mm²
Tightening torque			
	35-120 mm²	**26**	Nm
	150-240 mm²	**40**	Nm
		-	
		-	
Min. installation temperature		**+5**	°C
Operating temperature		**-25...+80**	°C
Weight		**340**	g
IP-protection		**IP20**	
		-	
Color / Material		**Grey Housing RAL 7035/PA66-V0, Tin plated Aluminium**	
Mounting / Connection		**DIN-rail and screw (M5) mounting**	



CE RoHS

Description

OTL-connectors are designed for connecting and branching aluminium and copper conductors. The body is made of tin plated aluminium. Housing is made of UL94 V0 class polyamide. Made in Finland.

Drawing

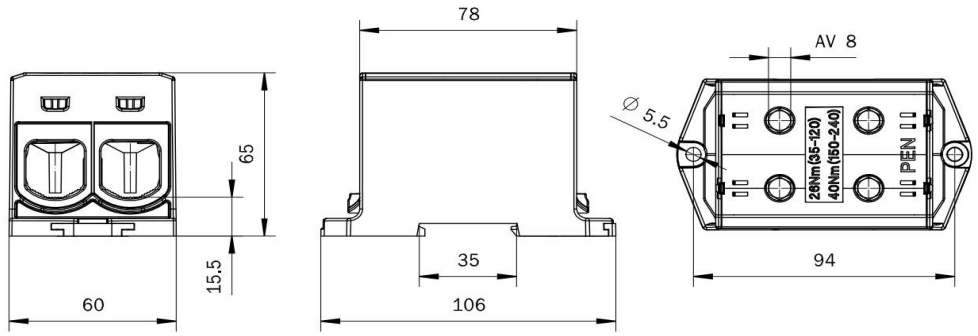

Package

Package	**Box**	Pcs / Package	**12**	Weight [kg]	**4,10**
Length [mm]	**225**	Width [mm]	**190**	Height [mm]	**145**

Ouneva Oy
Teollisuustie 21
FI-82730 Tuupovaara
Finland

www.ounevagroup.fi

www.ounevaproducts.fi