PRODUCT CARD

18.11.2024

Product data

Product code	**VC05-0044**	STK-code	**1914117**	EAN-code	**6410019141177**
Product name	OTL-connector 2xAl/Cu 6-95mm² (Yellow/Green)			ETIM class	**EC000897**
Wires	2xAl/Cu 6-95 mm²				

Technical data

Nominal current (IEC)	Cu	**490**	A
	Al	**220**	A
Nominal voltage (IEC)		**1000 V AC / 1500 V DC**	
Max. Current (US)	Cu	**2x230**	A
	Al	**180**	A
Max. Voltage (US)		**1000**	V
Number of poles		**1**	pcs
Max. Cross section		**95**	mm²
Tightening torque			
6-25 mm² (3-10 AWG)		**12**	Nm
35-95 mm² (4/0-2 AWG)		**22**	Nm
		-	
		-	
Min. installation temperature		**+5**	°C
Operating temperature		**-25...+80**	°C
Weight		**125**	g
IP-protection		**IP20**	
Standards		**EN 61238-1:2003; EN 60947-7-(1-2):2009; UL1059 &CSA C22.2 No. 158-10**	
Color / Material		**Green RAL 6018, Yellow RAL 1016/ PA66-V0**	
Mounting / Connection		**DIN-rail and screw (M5) mounting**	



Description

OTL-connectors are designed for connecting and branching aluminium and copper conductors. The body is made of tin plated aluminium. Housing is made of UL94 V0 class polyamide. Made in Finland.

Drawing

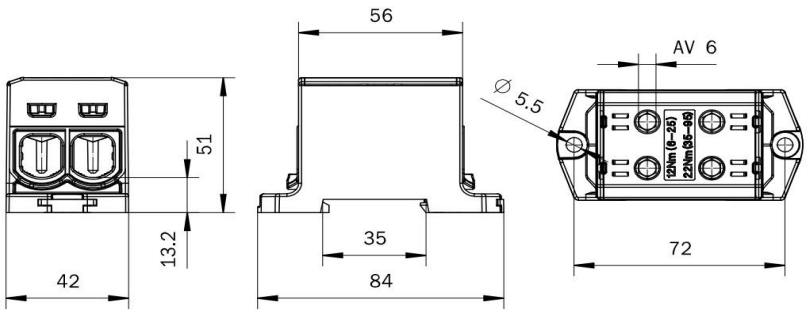

Package

Package	**Box**	Pcs / Package	**24**	Weight [kg]	**3,10**
Length [mm]	**285**	Width [mm]	**180**	Height [mm]	**115**

Ouneva Oy

Teollisuustie 21

FI-82730 Tuupovaara

Finland

www.ounevagroup.fi

www.ounevaproducts.fi