OUNEVA GROUP

PRODUCT CARD

18.11.2024

Product data

Product code	**VC05-0013**	STK-code	**1914103**	EAN-code	**6410019141030**
Product name	OTL-connector 1xAl/Cu 1,5-50mm² (Grey)			ETIM class	**EC000897**
Wires	1xAl/Cu 1,5-50 mm²				

Technical data

Nominal current (IEC)	Cu	**160**	A
	Al	**145**	A
Nominal voltage (IEC)		**1000 V AC / 1500 V DC**	
Max. Current (US)	Cu	**150**	A
	Al	**120**	A
Max. Voltage (US)		**1000**	V
Number of poles		**1**	pcs
Max. Cross section		**50**	mm²
Tightening torque			
1,5-2,5 mm² (14-16 AWG)		**1,5**	Nm
4-10 mm² (8-12 AWG)		**5**	Nm
16-50 mm² (1/0-6 AWG)		**10**	Nm
		-	
Min. installation temperature		**+5**	°C
Operating temperature		**-25...+80**	°C
Weight		**30**	g
IP-protection		**IP20**	
Standards		**EN 61238-1:2003; EN 60947-7-(1-2):2009; UL1059 &CSA C22.2 No. 158-10**	
Color / Material		**Grey RAL 7035/ PA66-V0**	
Mounting / Connection		**DIN-rail mounting**	



Description

OTL-connectors are designed for connecting and branching aluminium and copper conductors. The body is made of tin plated aluminium. Housing is made of UL94 V0 class polyamide. Made in Finland.

Drawing

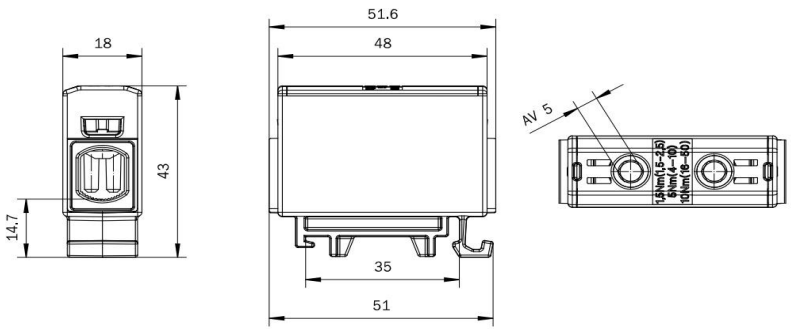

Package

Package	**Box**	Pcs / Package	**48**	Weight [kg]	**1,50**
Length [mm]	**165**	Width [mm]	**110**	Height [mm]	**150**

Ouneva Oy
Teollisuustie 21
FI-82730 Tuupovaara
Finland

www.ounevagroup.fi
www.ounevaproducts.fi