Data Sheet | Item Number: 207-1433

Gelbox; Branch; for cables; with gel; 221 Series; max. 6 mm² connectors; without splicing connectors; Size 3; gray

https://www.wago.com/207-1433



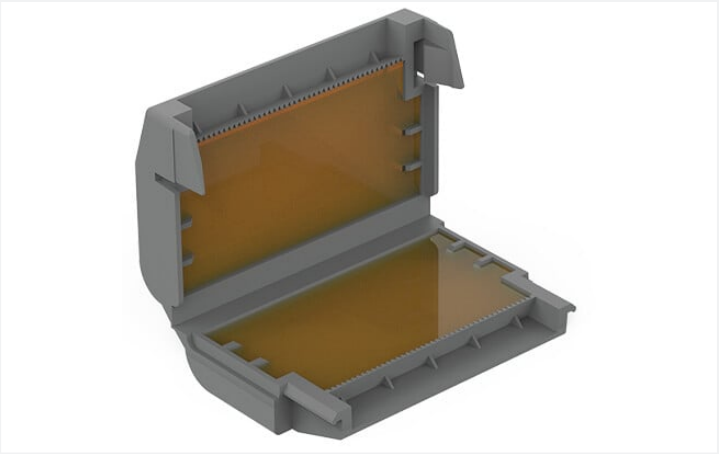

Color: gray

Note on Packaging Unit (PU) and Subpackaging Unit (SPU):
If you order a full PU, you will receive our eco-friendly, sustainable cardboard blisters packed in a shelf-ready box.
If you order a quantity smaller than a full PU, you will receive the eco-friendly, sustainable cardboard blisters without a shelf-ready box.

Please refer to the system description for the splicing connectors that can be used.

Your benefits:

- Easy, fast and safe to use
- Can be used immediately and accessed again later
- Silicon-free
- Label-free
- Suitable for indefinite storage
- The complete system consisting of WAGO's gelboxes and splicing connectors has been VDE-tested and IPX8-certified.

Connection data

Connection 1

Actuation type	Locking system

Physical data

Width	57 mm / 2.244 inches
Height	21.3 mm / 0.839 inches
Depth	40.1 mm / 1.579 inches

Mechanical data

Design	Size 3
Mounting type	Flying leads
Protection type	IPX8
Suitable	für Verbindungsklemmen 6 mm²

Material data

Note (material data)	Information on material specifications can be found here
Color	gray
Housing material	Polypropylene
Fire load	0 MJ
Weight	35.4 g

Environmental requirements

Ambient temperature (operation)	-55 … +85 °C
Ambient temperature (storage)	0 … +40 °C

Commercial data

ETIM 8.0	EC001170
ETIM 7.0	EC001170
PU (SPU)	24 (2) pcs
Country of origin	IT
GTIN	4055144097306
Customs tariff number	85389099990

Environmental Product Compliance

RoHS Compliance Status	Compliant,No Exemption

Approvals / Certificates

General approvals

Approval	Standard	Certificate Name
VDE VDE Prüf- und Zertifizierungsinstitut	EN 60669	400051938

Declarations of conformity and manufacturer's declarations

Approval	Standard	Certificate Name
EU-Declaration of Conformity WAGO GmbH & Co. KG	-	-
UK-Declaration of Conformity WAGO GmbH & Co. KG	-	-

Installation Notes

Installation



Open the Gelbox at the side latches.



Place the wired connector in the Gelbox.



Place the wired connector in the Gelbox.

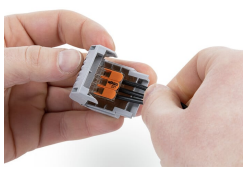

Close the Gelbox.

Continued on next page



Lift the flap and pull the cover perforation forward.



Press in the perforation on the sides.



Tear off the cover from the perforation.



As a counter display: Bend the rear flap at the fold, straighten it and fix it in the card-board cut-out



If the flap is not required, tear off from the perforation.