Data Sheet | Item Number: 207-1332

Gelbox; Branch; for cables; with gel; 221, 2x73 Series; max. 4 mm² connectors; without splicing connectors; Size 2; gray

https://www.wago.com/207-1332





Color: gray



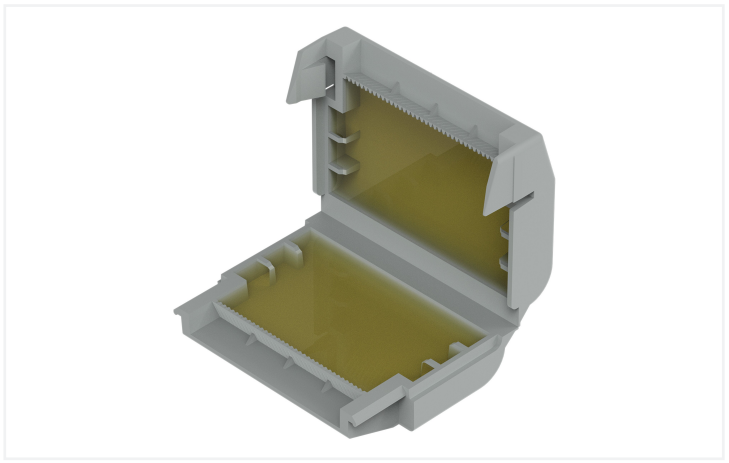



Note on Packaging Unit (PU) and Subpackaging Unit (SPU):
If you order a full PU, you will receive our eco-friendly, sustainable cardboard blisters packed in a shelf-ready box.
If you order a quantity smaller than a full PU, you will receive the eco-friendly, sustainable cardboard blisters without a shelf-ready box.

Please refer to the system description for the splicing connectors that can be used.

Your benefits:

- Easy, fast and safe to use
- Can be used immediately and accessed again later
- Silicon-free
- Label-free
- Suitable for indefinite storage
- The complete system consisting of WAGO's gelboxes and splicing connectors has been VDE-tested and IPX8-certified.

Connection data

Connection 1

Actuation type	Locking system

Physical data

Width	45.9 mm / 1.807 inches
Height	17.8 mm / 0.701 inches
Depth	33.6 mm / 1.323 inches

Mechanical data

Design	Size 2
Mounting type	Flying leads
Protection type	IPX8
Suitable	für Verbindungsklemmen 4 mm²

Material data

Note (material data)	Information on material specifications can be found here
Color	gray
Housing material	Polypropylene
Fire load	0 MJ
Weight	18.4 g

Environmental requirements

Ambient temperature (operation)	-55 … +85 °C
Ambient temperature (storage)	0 … +40 °C

Commercial data

ETIM 8.0	EC001170
ETIM 7.0	EC001170
PU (SPU)	48 (4) pcs
Country of origin	DE
GTIN	4055143998017
Customs tariff number	85389099990

 Continued on next page

Environmental Product Compliance

RoHS Compliance Status	Compliant,No Exemption

Approvals / Certificates

General approvals

Approval	Standard	Certificate Name
VDE VDE Prüf- und Zertifizierungsinstitut	EN 60998	400051938

Declarations of conformity and manufacturer's declarations

Approval	Standard	Certificate Name
EU-Declaration of Conformity WAGO GmbH & Co. KG	-	-
UK-Declaration of Conformity WAGO GmbH & Co. KG	-	-

Installation Notes

Installation



Open the Gelbox at the side latches.



Place the wired connector in the Gelbox.



Place the wired connector in the Gelbox.

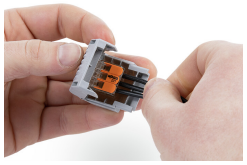

Close the Gelbox.

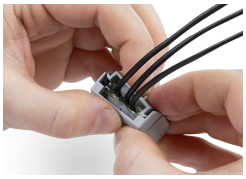

Close latch securely.



Re-accessible:

- Open the Gelbox.
- Remove the gel.
- Rewire with new components.



Lift the flap and pull the cover perforation forward.



Press in the perforation on the sides.



Tear off the cover from the perforation.



As a counter display: Bend the rear flap at the fold, straighten it and fix it in the cardboard cut-out



If the flap is not required, tear off from the perforation.