MURR ELEKTRONIK
stay connected

B24 Surface mounted h., high profile, IP65

Double locking lever m., side entry M32

B24
Surface mounted housing (high)
Double locking lever
IP65
Technical data will be only guaranteed with Murrelektronik components.

Link to Product

Illustration



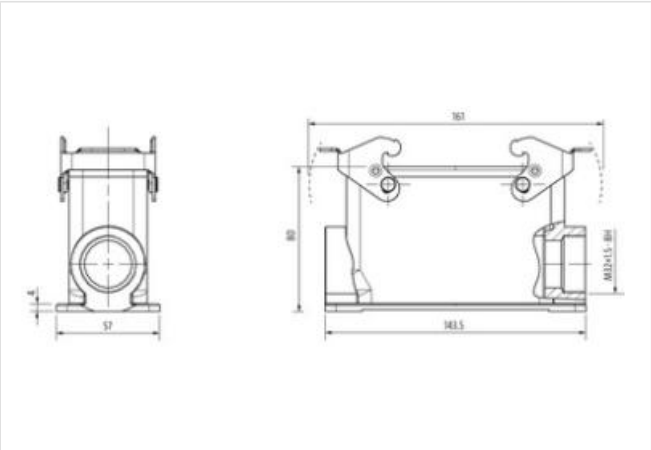

Product may differ from Image

Technical Data	
Mating cycles	min. 500
Locking of ports	Double locking lever
Protection (housing)	IP65 inserted and tightened (EN 60529), with gland
General data	
Material (gasket)	NBR
Temperature range	-40...+100 °C
Material (housing)	Aluminum die-cast
Housing type	Surface mounted housing
Threaded hole	M32
Size	B24
Cable outlet	laterally
Locking material	Steel (galvanized)
Climatic category	40/100/21 (EN 60068-1)
Material (housing surface)	powder-coated
Dimensions H×W×D	80×57×143.5 mm
Product article number of manufacturer	70MH-GSGHQ-B01D000

The information in this brochure has been compiled with the utmost care.
Liability for the correctness completeness and topicality of the information is restricted to gross negligence. Version: 2023-02-10