MURR ELEKTRONIK
stay connected

B16 Hood, low profile, IP65

Double locking lever, side entry M25

B16
Hood (low)
Double locking lever
IP65
Technical data will be only guaranteed with Murrelektronik components.

Link to Product

Illustration



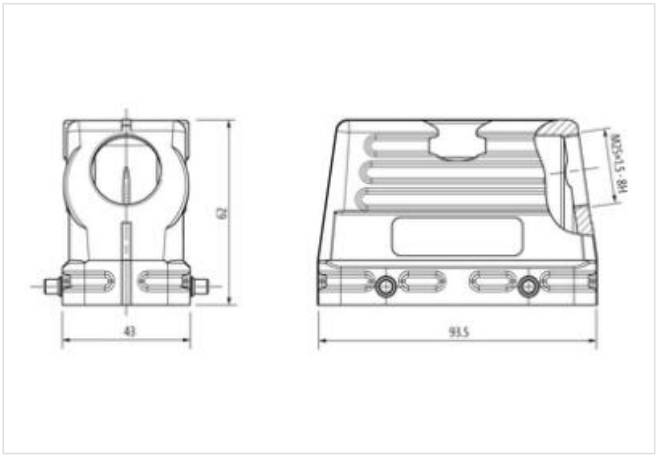

Product may differ from Image

Technical Data

Mating cycles	min. 500
Locking of ports	Double locking lever
Protection (housing)	IP65 inserted and tightened (EN 60529), with gland

General data

Temperature range	-40...+100 °C
Material (housing)	Aluminum die-cast
Housing type	Hood
Threaded hole	M25
Size	B16
Cable outlet	laterally
Locking material	Steel (galvanized)
Climatic category	40/100/21 (EN 60068-1)
Material (housing surface)	powder-coated
Dimensions H×W×D	62×43×93.5 mm

Product article number of manufacturer	70MH-GTFNQ-A02C000

The information in this brochure has been compiled with the utmost care.
Liability for the correctness completeness and topicality of the information is restricted to gross negligence. Version: 2023-02-10