MURR ELEKTRONIK
stay connected

B16 Bulkhead mounted h., IP67

Double locking lever m.

B16
Bulkhead mounted housing
Double locking lever
IP67
Technical data will be only guaranteed with Murrelektronik components.

Link to Product

Illustration



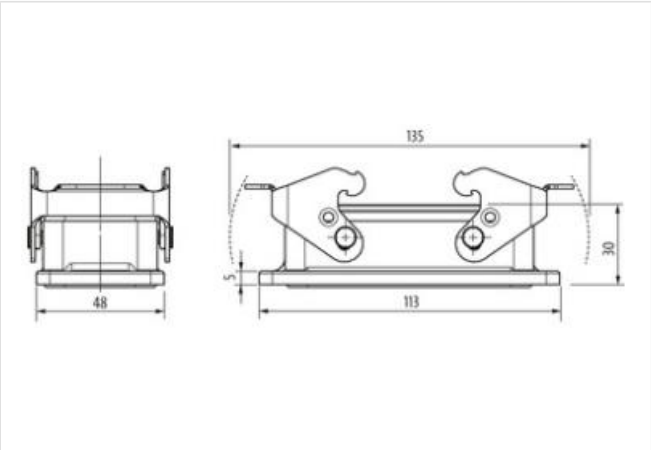

Product may differ from Image

Technical Data	
Mating cycles	min. 500
Locking of ports	Double locking lever
Protection (housing)	IP67 inserted and tightened (EN 60529)
General data	
Material (gasket)	NBR
Temperature range	-40...+100 °C
Material (housing)	Aluminum die-cast
Housing type	Bulkhead mounted housing
Size	B16
Locking material	Steel (galvanized)
Climatic category	40/100/21 (EN 60068-1)
Material (housing surface)	powder-coated
Dimensions H×W×D	30×48×113 mm
Product article number of manufacturer	70MH-GAFNQ-B000100

The information in this brochure has been compiled with the utmost care.
Liability for the correctness completeness and topicality of the information is restricted to gross negligence. Version: 2023-02-10