MURR ELEKTRONIK
stay connected

B10 male 10-pole, Push-in, 500 V, 16 A

E-Series
B10
Male
10-pole
Push-In terminals
Technical data will be only guaranteed with Murrelektronik components.
Please use wire end ferrule.

Link to Product

Illustration

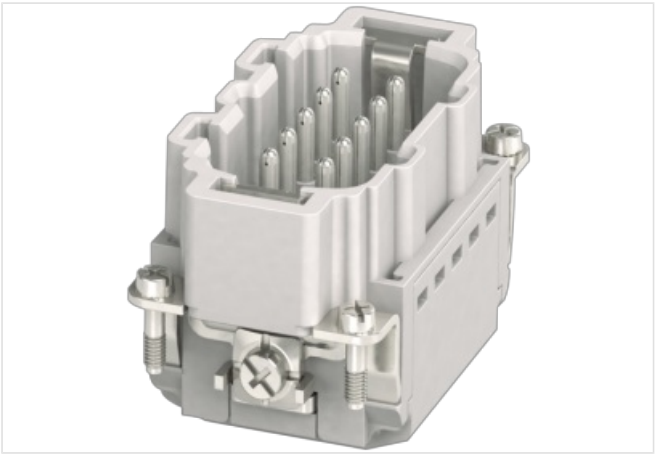

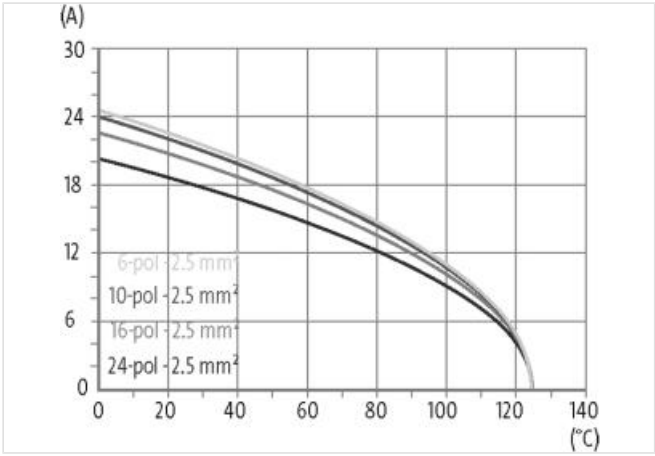

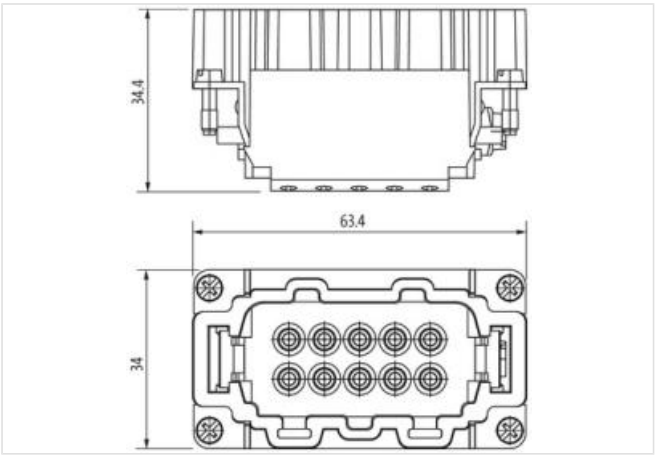

Product may differ from Image

Technical Data

Operating voltage	500 V AC/DC
Rated surge voltage	6.0 kV
Operating current	16 A
No. of poles	10 + PE
Mating cycles	min. 500

The information in this brochure has been compiled with the utmost care.
Liability for the correctness completeness and topicality of the information is restricted to gross negligence. Version: 2022-09-29

stay connected

Connection	Push-In terminals
Connection cross section	0.14...2.5 mm² (AWG 26...14)
Stripping length	8...10 mm
Over voltage category	III
General data	
Material (contact)	Brass
Material (contact surface)	Ag
Pollution Degree	3
Temperature range	-40...+125 °C
Material (contact carrier)	PC
Flammability class	V-0 (acc. to UL 94)
Size	B10
Type	Male
Climatic category	40/125/10
Dimensions H×W×D	33.7×33.9×63.4 mm
Cables	
Current load capacity	see derating curve
Article No.	70MH-ES010-EP03020

The information in this brochure has been compiled with the utmost care.
Liability for the correctness completeness and topicality of the information is restricted to gross negligence. Version: 2022-09-29