MSUD valve plug A-18mm with cable

PUR 3x0.75 bk UL/CSA+drag ch. 1.5m

Art.No.: 7000-18061-6360150
Weight: 0.114 kg
Country of origin: CZ
Model designation: MSUDK-AB4X-636_1.5

MSUD
Form A (18 mm)
230 V AC/DC ±10%
LED and suppression
Further cable lengths on request.
Plastic housings with good resistance against chemicals and oils.
The resistance to aggressive media should be individually tested for your application. Further details on request.

Link to Product

Illustration



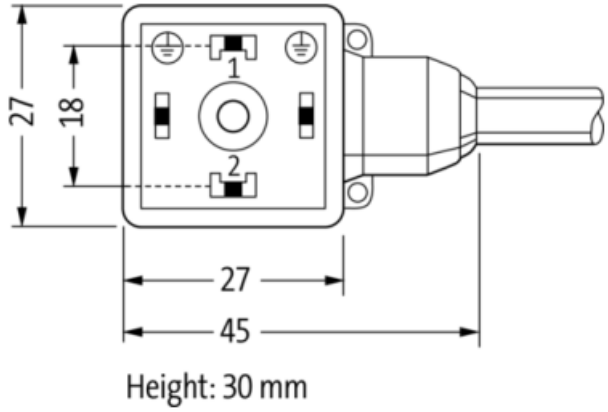

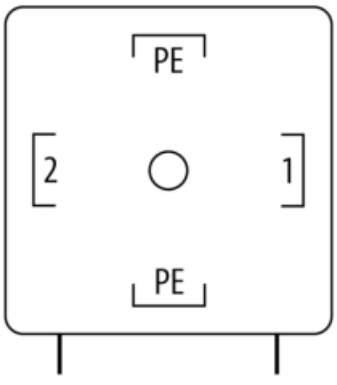

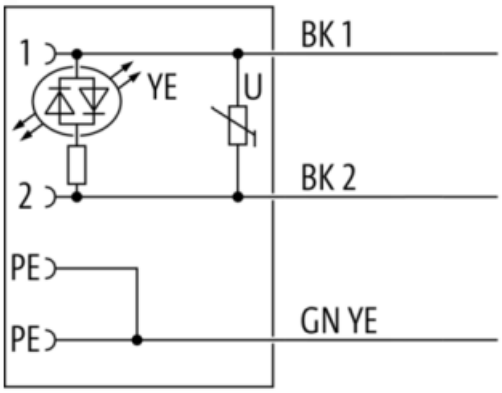

The information in this Product-PDF has been compiled with the utmost care.
Liability for the correctness completeness and topicality of the information is restricted to gross negligence. Version: 2026-09-02

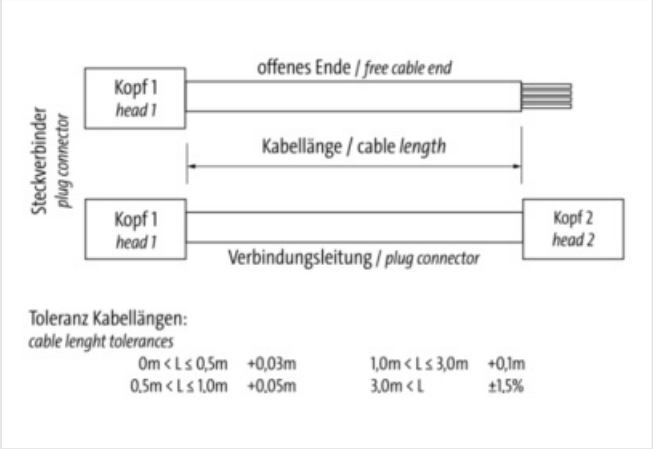



Product may differ from Image

Cable length	1,50 m
Side 1	
Family construction form	Valve connector form A
No. of poles	4
Gender	female
Mounting method	inserted, screwed
Threaded hole	M3x31
Tightening torque	0,4 Nm
Material	PBT
Degree of protection (EN IEC 60529)	IP67
Commercial data	
URL Webshop	https://shop.murrelektronik.com/7000-18061-6360150
EU-Customs tariff number	85444290
US-Customs tariff number	8544429090
ETIM-9.0	EC001855
ETIM-10.0	EC001855
customs tariff number	85444290
EAN	4048879192255
Packaging unit	1
Electrical data	
Drop-out delay time max.	20 ms
Electrical data | Supply	
Operating voltage AC	230 V
Operating voltage AC min.	207 V
Operating voltage AC max.	253 V
Operating voltage DC	230 V
Operating voltage DC min.	207 V
Operating voltage DC max.	253 V
Current operating per contact max.	4 A
Cut-off peak voltage max.	560 V
Installation | Connection	
Mounting set	M3x31

The information in this Product-PDF has been compiled with the utmost care.
Liability for the correctness completeness and topicality of the information is restricted to gross negligence. Version: 2026-09-02

Device protection | Electrical	
Additional condition protection degree	inserted, screwed
Pollution Degree	3
Mechanical data | Material data	
housing	Plastic
Color housing	black
Screw connection	Steel
Coating of fitting	galvanized
Mechanical data | Mounting data	
Mounting method	inserted, screwed
Environmental characteristics | Climatic	
Operating temperature min.	-25 °C
Operating temperature max.	85 °C
Additional condition temperature range	depending on cable quality
Important installation notes	
Note on bending radius	**Attention:** Observe the permissible bending radii when laying cables, as the IP protection class can be endangered by excessive bending forces.
Note on strain relief	Protect the connectors by suitable measures from mechanical loads, e.g. by the usage of cable ties.
Installation | Cable	
Cable identification	636
Cable Type	3
Cable weigth	51 g/m
UL AWM Style	20549 / 10493
Stranding	1 × 3 wires stranded
Wire arrangement	BK 1, BK 2, GNYE
Material wire insulation	PP
Amount wires	3
Outer diameter insulation	1.85 mm ± 0.1 mm
Conductor crosssection (wire)	0,75 mm²
Material conductor wire	Stranded copper wire, bare
Core construction (wire)	42 × 0.15 mm
Ingredient freeness wire insulation	lead-free, cadmium-free, CFC-free, halogen-free, silicone-free
Material jacket	PUR
Outer-diameter (jacket)	5.9 mm ± 5 %
Jacket Color	black / RAL 9005
Freedom from ingredients (jacket)	lead-free, cadmium-free, CFC-free, halogen-free, silicone-free
Material property (jacket)	abrasion-resistant, low adhesion, good machinability, matte
Conductor resistance (wire)	26 Ω/km @ 20 °C
Nominal voltage max.	300 V
Withstand voltage (wire - wire)	2.5 kV @ 60 s
Withstand voltage (wire - jacket)	2.5 kV @ 60 s
Current load capacity max. (wire)	12 A
Current load capacity (standard)	to DIN VDE 0298-4
Operating temperature (static)	-40 °C … 80 °C / 90 °C @ 10000 h Operation
Operating temperature (dynamic)	-25 °C … 80 °C / 90 °C @ 10000 h Operation
Operating temperature (drag chain)	-25 °C … 80 °C / 90 °C @ 10000 h Operation
Flame resistance	UL 1581 § 1090, CSA FT2, IEC 60332-2-2
Oil resistance	IEC 60811-404
Chemical resistance	good
Other resistances	good resistance to gasoline, resistant to hydrolysis, resistant to microbes
Notes	application-related testing
Bending radius (fixed)	5 × Outer diameter

The information in this Product-PDF has been compiled with the utmost care.
Liability for the correctness completeness and topicality of the information is restricted to gross negligence. Version: 2026-09-02

Bending radius (dynamic)	10 × Outer diameter
No. of bending cycles (C-track)	10 Mio. @ 25 °C
Traversing distance (C-track)	10 m @ 25 °C | horizontal
Travel speed (C-track)	3 m/s @ 25 °C
Acceleration (C-track)	10 m/s² @ 25 °C
No. of torsion cycles	2 Mio.
Torsion stress	± 180 °/m
Torsion speed	35 cycles/min

The information in this Product-PDF has been compiled with the utmost care.
Liability for the correctness completeness and topicality of the information is restricted to gross negligence. Version: 2026-09-02