MSUD valve plug A-18mm with cable

PUR 4x0.75 ye 5m

Art.No.: 7000-18111-0270500
Weight: 0.398 kg
Country of origin: CZ
Model designation: MSUDK-EB5K-027_5.0

MSUD
Form A (18 mm)
0...230 V AC/DC
without components
PE opposite cable entry (0°)
Further cable lengths on request.
Plastic housings with good resistance against chemicals and oils.
The resistance to aggressive media should be individually tested for your application. Further details on request.

Link to Product

Illustration



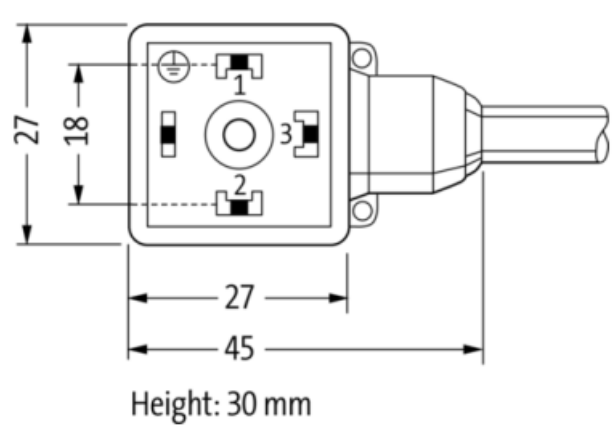

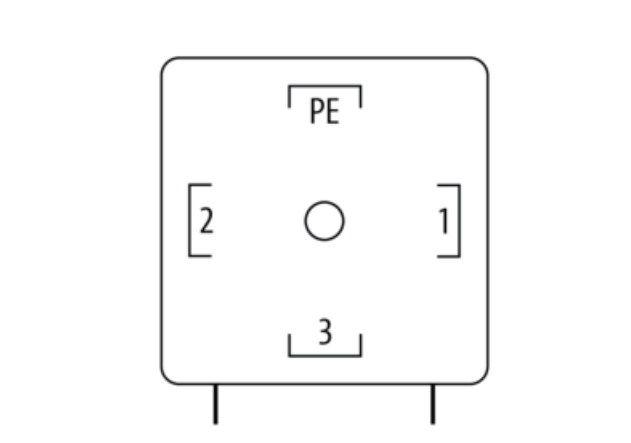

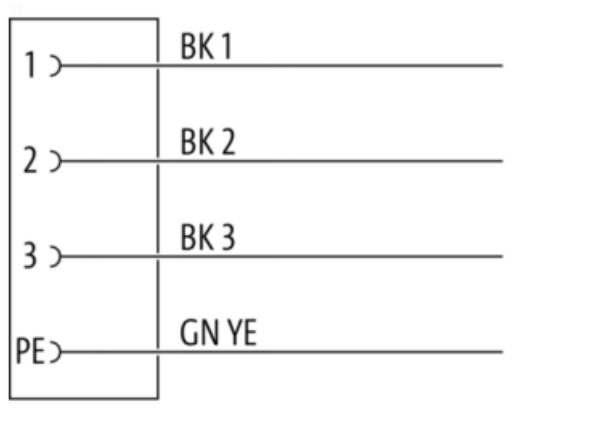

The information in this Product-PDF has been compiled with the utmost care.
Liability for the correctness completeness and topicality of the information is restricted to gross negligence. Version: 2026-09-02

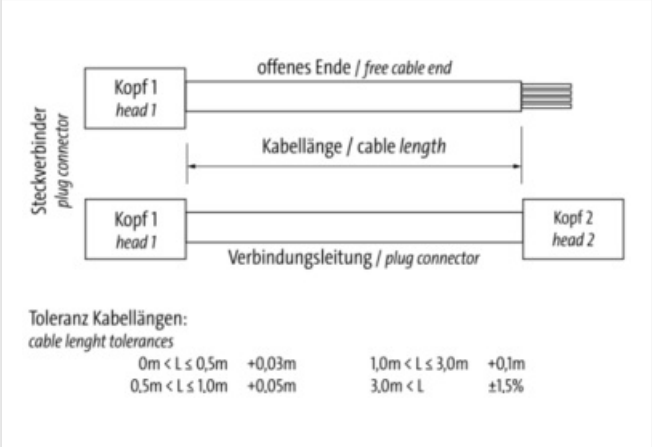



Product may differ from Image

Cable length	5,00 m
Side 1	
Family construction form	Valve connector form A
Mounting method	inserted, screwed
Threaded hole	M3x31
Tightening torque	0,4 Nm
Material	PBT
Degree of protection (EN IEC 60529)	IP67, IP66K
Commercial data	
URL Webshop	https://shop.murrelektronik.com/7000-18111-0270500
EU-Customs tariff number	85444290
US-Customs tariff number	8544429090
ETIM-9.0	EC001855
ETIM-10.0	EC001855
customs tariff number	85444290
EAN	4048879191241
Packaging unit	1
Electrical data | Supply	
Operating voltage AC max.	230 V
Operating voltage DC max.	230 V
Current operating per contact max.	10 A
Installation | Connection	
Mounting set	M3x31
Device protection | Electrical	
Additional condition protection degree	inserted, screwed
Pollution Degree	3
Mechanical data | Material data	
housing	Plastic
Color housing	black
Screw connection	Steel
Coating of fitting	galvanized

The information in this Product-PDF has been compiled with the utmost care.
Liability for the correctness completeness and topicality of the information is restricted to gross negligence. Version: 2026-09-02

Mechanical data | Mounting data	
Mounting method	inserted, screwed
Environmental characteristics | Climatic	
Operating temperature min.	-25 °C
Operating temperature max.	85 °C
Additional condition temperature range	depending on cable quality
Important installation notes	
Note on bending radius	**Attention:** Observe the permissible bending radii when laying cables, as the IP protection class can be endangered by excessive bending forces.
Note on strain relief	Protect the connectors by suitable measures from mechanical loads, e.g. by the usage of cable ties.
Conformity	
Product standard	EN 175301-803 (valve plug)
Installation | Cable	
Cable identification	027
Cable Type	2
Cable weigth	68 g/m
UL AWM Style	20549 / 1731
Stranding	1 × 4 wires stranded
Wire arrangement	BK 1, BK 2, BK 3, GNYE
Material wire insulation	PVC
Amount wires	4
Outer diameter insulation	1.8 mm ± 0.1 mm
Conductor crosssection (wire)	0,75 mm²
Material conductor wire	Stranded copper wire, bare
Core construction (wire)	42 × 0.15 mm
Material properties wire insulation	good machinability
Ingredient freeness wire insulation	lead-free, cadmium-free, CFC-free, silicone-free
Material jacket	PUR
Outer-diameter (jacket)	6.5 mm ± 5 %
Jacket Color	yellow / RAL 1021
Material inner jacket	PVC
Color (inner jacket)	yellow
Freedom from ingredients (jacket)	lead-free, cadmium-free, CFC-free, silicone-free
Material property (jacket)	abrasion-resistant, low adhesion, good machinability, matte
Conductor resistance (wire)	26 Ω/km @ 20 °C
Nominal voltage max.	300 V
Withstand voltage (wire - wire)	2 kV @ 60 s
Withstand voltage (wire - jacket)	2 kV @ 60 s
Current load capacity max. (wire)	9,6 A
Current load capacity (standard)	to DIN VDE 0298-4
Operating temperature (static)	-30 °C … 80 °C
Operating temperature (dynamic)	-5 °C … 80 °C
Oil resistance	good
Chemical resistance	good
Other resistances	good resistance to gasoline, resistant to hydrolysis, resistant to microbes
Notes	application-related testing
Bending radius (fixed)	10 × Outer diameter
Bending radius (dynamic)	15 × Outer diameter
No. of bending cycles (C-track)	2 Mio. @ 25 °C
Traversing distance (C-track)	5 m @ 25 °C
Travel speed (C-track)	3.3 m/s @ 25 °C
Acceleration (C-track)	5 m/s² @ 25 °C

The information in this Product-PDF has been compiled with the utmost care.
Liability for the correctness completeness and topicality of the information is restricted to gross negligence. Version: 2026-09-02