MURR ELEKTRONIK
stay connected

MB REDUNDANCY BALANCE

IN: 24VDC/2x20ADC OUT: 24V/20-40ADC

INPUT: 24 V DC (SELV/PELV)
OUTPUT: max. 2× 20/1× 40 A
low power loss (MOSFET-Technology)

[Link to Product]

Illustration



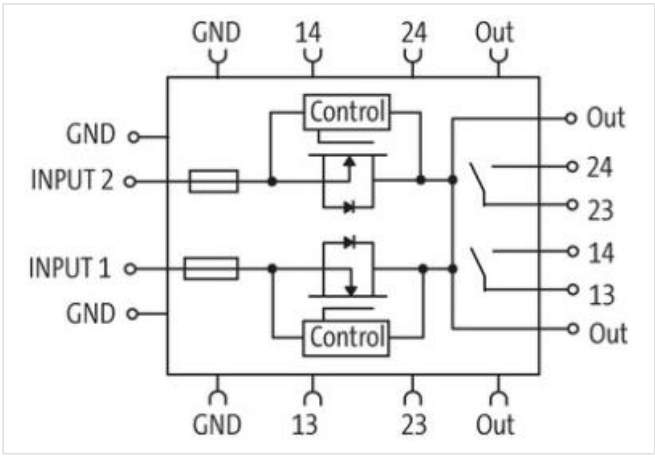

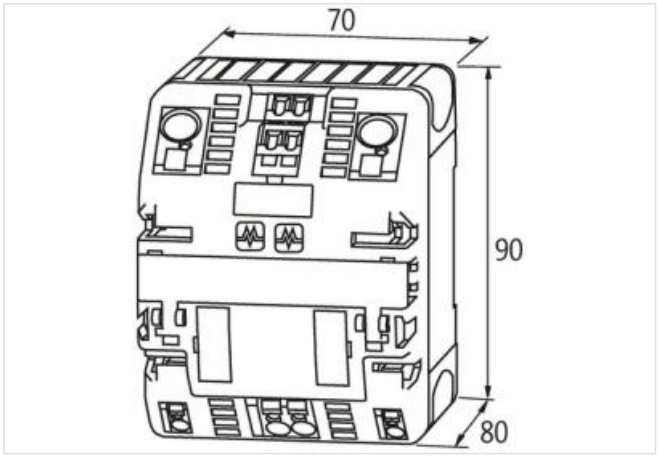

Product may differ from Image

General data

Standards	EN 61000-6-2, EN 61000-6-3
Mounting method	DIN-rail mountable TH35 (EN 60715)
Temperature range	-25...+60 °C (storage temperature -40...+85 °C)
Relative humidity	5...95%, no condensation
Efficiency	99.5%
Connection	Spring clamp terminals
Bridging concept	two sides, with spring clamp terminals or bridge set (max. 40 A)

The information in this brochure has been compiled with the utmost care.
Liability for the correctness completeness and topicality of the information is restricted to gross negligence. Version: 2023-02-10

Output	
Output voltage	24 V DC (18...30 V DC)
LED display	LED (red/green)
Alarm output	potential free (relay contact) for input voltage/load distribution
Output current	26 A (-25...+40 °C)
Parallel usage/serial usage	2 units: 40 A (-25...+60 °C); 52 A (-25...+40 °C)/-
Input	
Input voltage	24 V DC (18...30 V DC)
Invers-polarity protection	max. 30 V DC
Input current	2× 20 A
Total current	max. 40 A
Product article number of manufacturer	85496

The information in this brochure has been compiled with the utmost care.
Liability for the correctness completeness and topicality of the information is restricted to gross negligence. Version: 2023-02-10