MURR ELEKTRONIK
stay connected

MB DIODE

IN: 24VDC/2x20ADC OUT: 24V/20-40ADC

INPUT: 24 V DC (SELV/PELV)
OUTPUT: max. 2× 20/1× 40 A

Link to Product

Illustration



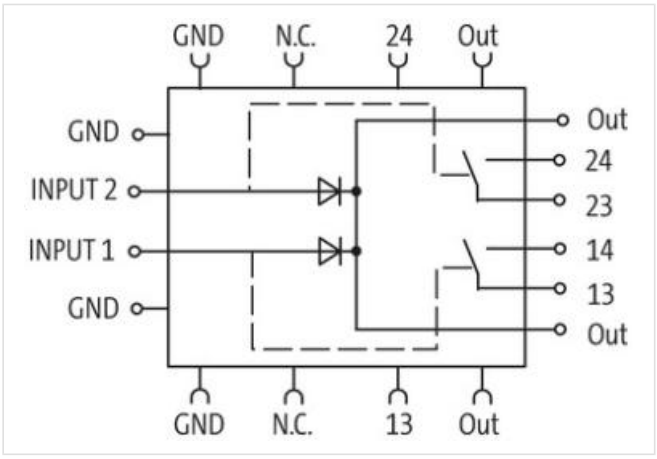

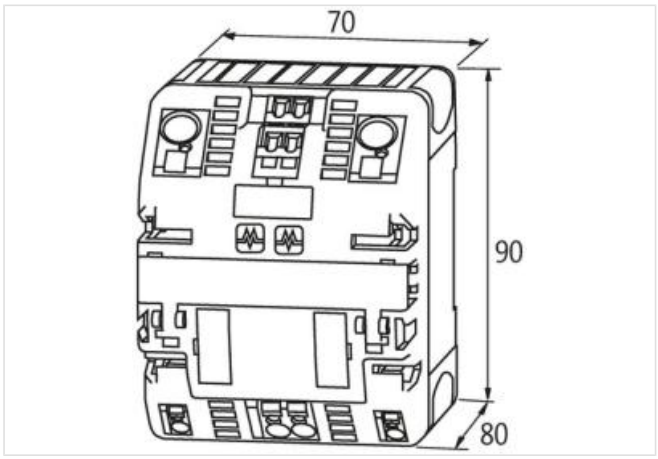

Product may differ from Image

General data

Standards	EN 61000-6-2, EN 61000-6-3
Mounting method	DIN-rail mountable TH35 (EN 60715)
Temperature range	-25...+55 °C (storage temperature -25...+85 °C)
Relative humidity	5...95%, no condensation
Efficiency	97%
Connection	Spring clamp terminals
Bridging concept	two sides, with spring clamp terminals or bridge set (max. 40 A)

Output

The information in this brochure has been compiled with the utmost care.
Liability for the correctness completeness and topicality of the information is restricted to gross negligence. Version: 2023-02-10

Output voltage	24 V DC (21...30 V DC)
LED display	LED (green)
Alarm output	potential free per channel (relay contact)
Overload	at 20 A +50% for 4 s
Output current	20 A (-25...+55 °C); 40 A (-25...+40 °C)
Input	
Input voltage	24 V DC (21...30 V DC)
Invers-polarity protection	internal protection against reverse polarization up to 60 V DC
Input current	2× 20/1× 40 A
Total current	max. 40 A
Product article number of manufacturer	85396

The information in this brochure has been compiled with the utmost care.
Liability for the correctness completeness and topicality of the information is restricted to gross negligence. Version: 2023-02-10