Technical data:

Input values:

Input voltage:
+24 V DC (SELV/ PELV)
Residual ripple of power supply
<5 % for one-phase, 2 % for three-phase

Range of working voltage
18-30 V DC
Frequency of power ON/OFF max 0.5 Hz
Overvoltage protection (suppressor diode) 36 V
⚠ **No** reverse polarity protection

Total operating current: 32 A (0 to +20 %)

Maximum summation current of (+24 V) terminals: 50 A

Output values:

Nominal output voltage:
24V DC, corresponding to the input voltage

Voltage drop at 4 A per each load branch:
Typical 0.2 V

Turn ON capacity:

Output Current Out 1 ... Out 8: 4 A

The outputs meet the requirements for Class 2 according to UL1310 / NEC Article 725th
Max. 20 mF*

Internal fuse: 4 A delay fuse for each channel

Signalling: See “Displays“

Environment:
Storing temperature : -40 °C to +80 °C
Environmental temperature: 0 °C to +55 °C
Cooling by natural convection

Safety:
Rated insulation voltage: 50 V
degree of pollution: 2
Classification of over-voltage III
Additional output protection:
4 A fuse for each channel internal
(UL 248-14, UL File E10480).

Regulations:
EN 60529: Protective system - IP20
EN 61000-6-2: Immunity to interference
EN 61000-6-3: Interference emission class B
EN 60068-2-6: Oscillating test
EN 60068-2-27: Shock test

Weight: ca. 160 g

Dimensions L x W x D: 90 x 70 x 80 mm

* Depending on: component tolerance, conduit length, used power supply, load current.

Schematic circuit diagram:

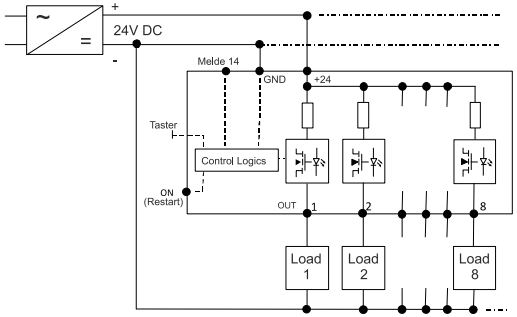

Notice:

Please pay attention to the wire capability in relationship of its cross section, ambient temperature, current as well as the MICO channel’s trigger characteristic, in order to fulfil the line protection and device protection according to EN 60204-1. For lucid reasons these installation instructions do not contain every detailed information about this product and may not consider each fictitious case of erection, operation or installation. Continuing information may be taken from the data sheet or from our homepage http://www.murrelektronik.com.

Technical alterations are reserved at any time.

© 2012 Murrelektronik GmbH, Oppenweiler
All rights reserved. Each reprint, even in parts, requires our written consent.

Murrelektronik GmbH Falkenstraße 3 Telefon +49 7191 47-0
GERMANY 71570 Oppenweiler Telefax +49 7191 47-491000
info@murrelektronik.com http://www.murrelektronik.com

Technische Änderungen vorbehalten / We reserve the right to change this specification Schutzvermerk ISO 16016 beachten / Refer to protection notice ISO 16016
Von EDV-System heruntergeladene bzw. ausgedruckte Dokumente besitzen informativen Charakter und unterliegen nicht dem Änderungsdienst /
Documents downloaded by the EDP system and/or printed out have only an informative character and are not subject to the updating service

Installation instructions V2.2 Murrelektronik Intelligent Current Operator
MICO BASIC 8.4 Art.-No.: 9000-41068-0400000

MICO BASIC 8.4 Art.-No. 9000-41068-0400000

Wiring diagram:

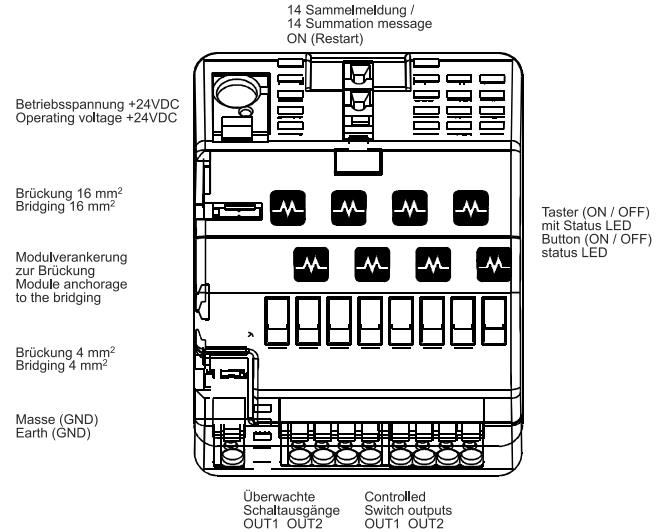

Functional description:

MICO BASIC 8.4 is an 8-channel electronic auxiliary circuit switch and serves as current monitoring. The operating voltage (+24V DC / at least 10A) supplies the 8 current monitored load circuits (channels). By engaging the operating voltage, the switched-on channels are time-delay activated, two channels at a time (time-delay of each channel pair ca. 75 ms) to avoid overload current. When exceeding the permitted operating current, the corresponding channel will be disconnected pursuant to the disconnecting characteristic. In the event of voltage dip or power failure the current operating condition will be saved and re-established after the recovery of the supply voltage. Each channel may be manually connected or disconnected through the button. The current operating condition is signalled by the LED - (red/green, see displays). All channels disconnected due to overload may be activated through ON (restart) - see restart. In addition, the module is provided with a message output to give a summation message - see control output. A bridging concept permits the lining-up onto a MICO CLASSIC (e.g. 4.4 / 4.6 / 4.10) without wiring (maximum total operating current: 50A). For this purpose a bridging set is available as an option.

Bridging set:

The bridging set minimises the efforts of wiring, if multiple modules need to be joined together. It offers the possibility of bridging the following potentials: +24 V DC and GND. It is necessary to fix the modules with the in the bridging enclosed connecting piece. The bridging set is available under:

Art.-No.: 9000-41034-0000001 (packing unit 10 pieces)
Art.-No.: 9000-41034-0000002 (packing unit 1 piec)

Murrelektronik GmbH Falkenstraße 3 Telefon +49 7191 47-0
GERMANY 71570 Oppenweiler Telefax +49 7191 47-491000
info@murrelektronik.com http://www.murrelektronik.com

Safety instructions:

Warning: This equipment is only suitable for the operation on +24 V DC (protection low voltage). The direct connection of this equipment may cause death, severe bodily injuries and considerable property damage. Only competent and qualified personnel may work on this equipment or in its proximity. The perfect and safe operation of this equipment requires the appropriate transportation, professional storage, erection and installation. Without suitable backup fuse or short-circuit protection measures, fires can occur. Use a suitable backup fuse or a short-circuit proof battery pack.

Attention:

- During service work when manually disconnecting MICO, the operating company shall ensure that the system is protected against unintended reconnection (according to the currently applicable provisions BGV A3 (Trade Association Ordinance) or EN 50110-1).
- Parallel switching of multiple load branches for increase of power is not permitted.
- Series connection of multiple MICO modules to produce selective switch-off-characteristic is not allowed.
- A generated voltage at output is not allowed to be durably higher than the input voltage.

Notice: The GND connection of the equipment merely serves to supply the internal electronics. The 0 voltage of the consumer shall be conducted directly to the power supply through separate lines.
The conductor cross-sections and line lengths must be adapted to the adjusted current range.
In battery operation, the supply line between the battery and the MICO must not exceed ≤6 m.

Recommendation: - Lay GND wire as near and parallel as possible to the 24 V lines.

Installation: For the installation the pertinent DIN/VDE regulations or country-specific rules must be complied with. Assemble on support bar TH 35 pursuant to EN 60715. Due to operation-related heating the equipment must be assembled vertically so that the input terminals are on top. A free space of 30 mm above and below the equipment should be complied with. The connection of the supply voltage (24 V DC) must be performed in accordance with VDE 100 and VDE 0160 and shall only be connected to a power supply with “safe separation“, (SELV/PELV) corresponding to EN 60950-1 or 61558-2-6.

Condition at delivery:
- Channel disconnected

Scope of delivery: - Module MICO Basic 8.4
- Installation instructions
- Designation labels

Accessories: - Bridging set: (see bridging set) / - Designation labels: Art.-No.: 996078

ON-Restart - input: The ON-Restart – input provides the user with the possibility of reconnecting load circuits, which have been disconnected before by exceeding the current threshold. All disconnected channels are re-enabled by placing a defined signal at the input: 0V... 5V, min. 1s for “OFF” and 10V - 30V, min. 20ms for “ON“. This behaviour does not apply to manually disconnected channels. They may only be activated through the button (2) at the module.

Summation message: The summary message output is an “active-low” signal. It becomes GND – potential, “low” if one or more channels have been disconnected. This message output becomes the same voltage level as the input voltage, “high” if all channels are active. This signal is suitable to drive PLC inputs.

Approvals:				
CE	C22.2 No. 14-05	UL2367 Class 2	LISTED IND.CONT.EQ 61RM	EAC

	DNV GL – Location classes			
	Temperature	**D**	Humidity	**B**
	Vibration	**A**	EMC	**A**
	Enclosure	**A**		

Murrelektronik GmbH
GERMANY
Falkenstraße 3
71570 Oppenweiler
info@murrelektronik.com
Telefon +49 7191 47-0
Telefax +49 7191 47-491000
http://www.murrelektronik.com

Installation instructions V2.2 **Murrelektronik Intelligent Current Operator**
MICO BASIC 8.4 Art.-No.: 9000-41068-0400000

Pin connections and terminal assignment:

Use 60/75°C copper conductors only or equivalent.

Terminals	Function	Terminal range	Remarks
Input +24V	Connection Input voltage +24V	Max. 16 mm², acc. to AWG 6	
Input GND	Connection GND to supply the internal electronic	Max. 4 mm², acc. to AWG 12	Notice: The 0V of the consumer must lead directly to the voltage supply through separate lines!
Output OUT 1…8	MICO outputs to be connected with the load circuit	Min.0.5 mm², acc. to AWG20, max. 4 mm², acc. to AWG 12	
ON	Remote activation (except manually disconnected channels with red LED on)	Max. 2.5 mm², acc. to AWG 14	
14	Summation message contact	Max. 2.5 mm², acc. to AWG 14	

Displays:

Display	State	Indication
green	connected	Function OK
red	disconnected	Manually disconnected
green flashing	threshold	Load above 90% of operating current and no over current
red flashing 1 Hz	disconnected	Over current
red quickly flashing 5 Hz	defect	Internal fault

Disconnecting characteristic:

Each current range is provided a separate disconnecting characteristic with a basic accuracy of 0...+20% – see diagram. The disconnecting time at short-circuit amounts to max. 5 ms.

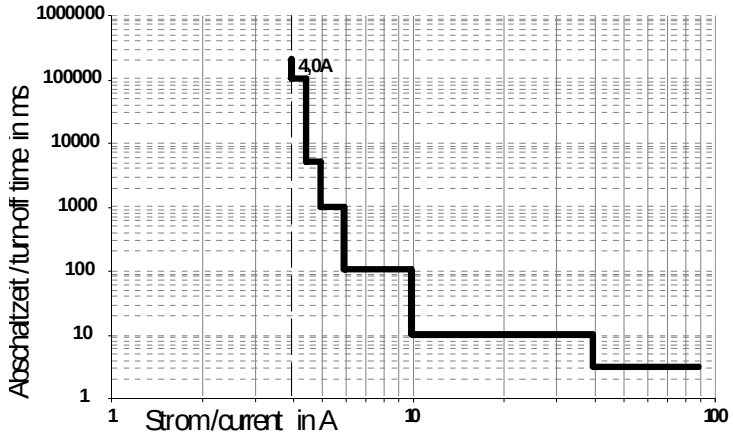

Murrelektronik GmbH
GERMANY
Falkenstraße 3
71570 Oppenweiler
info@murrelektronik.com
Telefon +49 7191 47-0
Telefax +49 7191 47-491000
http://www.murrelektronik.com