MURR ELEKTRONIK
stay connected

MICO BASIC 4.4 electronic circuit protection, 4 CHANNELS

IN: 24 V DC OUT: 24 V / 4 A

MICO BASIC 4.4
4 channels
Current adjustment 4 A

[Link to Product]

Illustration



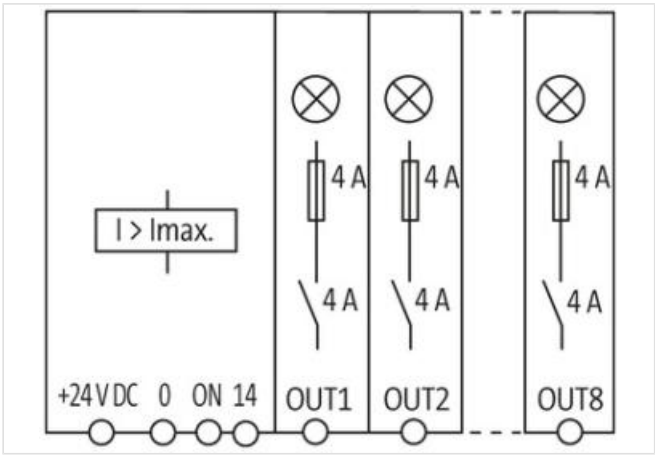

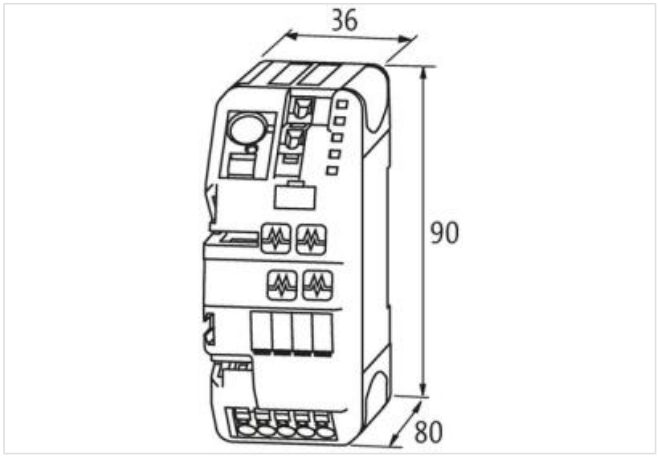

Product may differ from Image

General data

Mounting method	DIN-rail mountable TH35 (EN 60715)
Temperature range	0...+55 °C (storage temperature -40...+80 °C)
Connection	Spring clamp terminals
Dimensions H×W×D	90×36×80 mm
Bridging concept	one side, with spring clamp terminals or bridge set (max. 40 A)
Output terminals	per output 1× 4 mm²
Input terminals	1× 16 mm²

The information in this brochure has been compiled with the utmost care.
Liability for the correctness completeness and topicality of the information is restricted to gross negligence. Version: 2023-02-10

Alarm terminals	2.5 mm²
Output	
Inrush capacity	max. 20 mF (per channel)
Current adjustment	4 A
Input	
Operating voltage	24 V DC (18...30 V DC)
Control inputs	
Input voltage (ON)	10...30 V DC
Impulse length (ON)	min. 20 ms
Control outputs	
Group alarm output	max. 20 mA; high: all channels ON; low: not all channels ON
Product article number of manufacturer	9000-41064-0400000

The information in this brochure has been compiled with the utmost care.
Liability for the correctness completeness and topicality of the information is restricted to gross negligence. Version: 2023-02-10